STAMPA CATALOGO
CATALOGUE PRINT

AGGIORNAMENTI
UP-TO-DATE

Zoom +

Print

Zoom -

PROFILO AZIENDALE
COMPANY PROFILE

REQUISITI DEL PRODOTTO
PRODUCTS REQUIREMENTS

CATALOGO PRODOTTI
PRODUCTS CATALOGUE

TIPI DI IMBALLAGGIO
PACKAGING

SIMBOLOGIA
SYMBOLS

GUIDA ALL'IMPIEGO
INSTRUCTIONS FOR USE

RUOTE E ROTELLE PER COLLETTIVITA'
WHEELS AND CASTORS FOR INSTITUTIONAL USE

AL.FER SRL

Via Castagnini, 25 40012 Calderara di Reno (Bo) Italy
Tel. (00 39) 051 728569-70-72-76 - Fax (00 39) 051 728166
http://www.alfer.it

ESC

PRODOTTI AL.FER nelle varie SERIE : AL.FER products in the different ranges:	PORTATE INDICATIVE INDICATIVE LOAD CAPACITY
SERIE **L-LI** –ROTELLE PER IMPIEGHI DINAMICI DI TIPO LEGGERO –CASTORS FOR DYNAMIC LIGHT DUTY USE – SERIE L from page 30 to 49 – SERIE LI from page 51 to 53	RUOTA GOMMA <40÷45daN RUOTA Poliuretano <60daN RUOTA NYLON <20daN
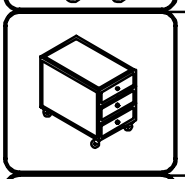 SERIE **ML** –ROTELLE PER IMPIEGHI DINAMICI DI TIPO MEDIO CON ALTEZZA CONTENUTA –CASTORS FOR DYNAMIC MEDIUM DUTY WITH RESTRAINED HEIGHT –SERIE ML from page 55 to 65	RUOTA GOMMA <45daN RUOTA Poliuretano <80daN RUOTA NYLON <60daN
SERIE **M** –ROTELLE PER IMPIEGHI DINAMICI MEDIO-LEGGERI –CASTORS FOR DYNAMIC MEDIUM-LIGHT DUTY USE –SERIE M from page 67 to 85	RUOTA GOMMA <50÷70daN RUOTA Poliuretano <60daN RUOTA NYLON <30÷50daN
SERIE **30** –ROTELLE PER IMPIEGHI DINAMICI DI TIPO MEDIO –CASTORS FOR DYNAMIC MEDIUM DUTY USE –SERIE 30 from page 87 to 117	RUOTA GOMMA <80÷100daN RUOTA Poliuretano <100daN RUOTA NYLON <50daN
SERIE **40** –ROTELLE PER IMPIEGHI DINAMICI DI TIPO MEDIO-PESANTE –CASTORS FOR DYNAMIC MEDIUM -HEAVY DUTY USE –SERIE 40 from page 118 to 138	RUOTA GOMMA <80÷100daN RUOTA Poliuretano <120daN RUOTA NYLON <50daN
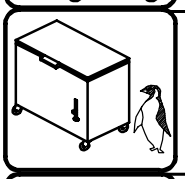 SERIE **2** – ROTELLE GEMELLATE PER IMPIEGHI DINAMICI MEDIO LEGGERI CON BUONA SCORREVOLEZZA –TWIN CASTORS FOR DYNAMIC MEDIUM-LIGHT DUTY USE WITH GOOD ROLLING –SERIE 2 from page 140 to 154	RUOTA GOMMA <60÷100daN RUOTA Poliuretano <100daN RUOTA NYLON <40÷60daN
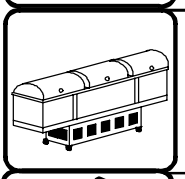 SERIE **230** –ROTELLE GEMELLATE PER IMPIEGHI DINAMICI DI TIPO MEDIO PESANTE CON ALTEZZA CONTENUTA –TWIN CASTORS FOR DYNAMIC MEDIUM-HEAVY DUTY USE WITH RESTRAINED HEIGHT –SERIE 230 from page 156 to 163	RUOTA NYLON <90daN RUOTA Poliuretano <130daN
SERIE **W** –ROTELLE IN LEGNO PER ARREDAMENTO –WOODEN FURNITURE CASTORS –SERIE W from page 165 to 179	<70daN
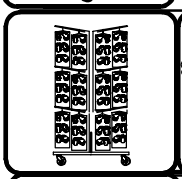 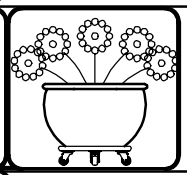 SERIE **A** –RUOTINE per IMPIEGHI STATICI DI TIPO LEGGERO e FAI daTE – FURNITURE CASTORS AND DO-IT-YOURSELF APPLICATION –SERIE A from page 181 to 186	<17÷20daN 23/NFS <80daN
SERIE SUPERMARKET **S** – ROTELLE PER CARRELLI SUPERMARKET –CASTORS FOR SHOPPING TROLLEYS – SERIE SUPERMARKET from page 188 to 191	<100daN
SERIE **PD** –RUOTE E ROTELLE PER RASAERBA e ARREDI per GIARDINAGGIO –WHEELS AND CASTORS FOR LAWN MOWER AND GARDEN FURNITURE – SERIE PD from page 193	<50÷120daN

CHI SIAMO AL.FER: IERI OGGI E DOMANI

1973 - Il Sig. Paolo Alvisi ha l'opportunità di rilevare una piccola azienda
che forniva ruote e rotelle alle industrie di elettrodomestici.
Gli inizi come sempre furono molto faticosi,
ma la passione per la meccanica ed un mercato europeo in costante espansione
davano ad AL.FER i giusti spazi per farla diventare
una piccola industria in forte crescita fino agli anni 2000.

2000 - Gli anni della globalizzazione e l'entrata in vigore dell'Euro
penalizzano AL.FER che è focalizzata a produrre
per una domanda fino ad allora in crescita
e quindi poco attenta all'aggiornamento della gamma di prodotti
e al problema avanzante dell'avvicendamento generazionale.

2006 - AL.FER avvia una fase di rinnovamento inserendo forze nuove
ed applicando efficaci e coraggiose scelte di riorganizzazione aziendale.
In questa fase è basilare
il sostegno dei prodotti tradizionali che ci hanno affermato.
Il presente CD
ve li presenta aggiornati nella gamma e nel design,
in un nuovo formato elettronico dinamico.

Il Sig. Paolo Alvisi conferma
a tutti i clienti che in questi anni hanno apprezzato il nostro lavoro,
il suo totale appoggio ed impegno nella guida al cambiamento,
affinché la società AL.FER del futuro
sia in grado di proseguire quella creativa attività
che ci ha caratterizzato nel tempo.

Cordialmente,

AL.FER & C. SRL

ABOUT US AL.FER: YESTERDAY TODAY AND TOMORROW

1973 - Mr. Paolo Alvisi has the opportunity to take over a small company
that used to supply wheels and castors to the household appliances industries.
The beginning has been very hard as it always happens,
but the passion for the mechanics and a great developing European market
gave to AL.FER the right spaces to become
a small industry growing even more strongly until the years 2000.

2000 - The years of globalization and introduction of Euro
have caused some difficulties to AL.FER, that was focused to produce
as much as possible trying to answer to a growing demand until then
and for this not careful enough to the products range updating
and to the problem of generation changes that was advancing

2006 - AL.FER starts a renovation phase getting new forces
and setting effective and brave choices of company reorganization.
At this stage it's basic
the support of the traditional products that made us know on the market.
This CD shows them to you
with an up-to-dated range and design,
in a dynamic electronic format

Mr. Paolo Alvisi confirms
to all customers that appreciated our work during these years,
his full help and care to lead the change,
so that the company AL.FER of the future
will be able to continue the creative activity
that has been a characteristic of us in the time.

Kind regards

AL.FER & C. SRL

GUIDA PER L'UTILIZZO - GUIDE FOR USE

PORTATA DINAMICA - DYNAMIC LOAD CAPACITY
REF. ISO 22881:2004

≤ 20 daN | ≤ 30 daN | ≤ 40 daN | ≤ 50 daN | ≤ 60 daN | ≤ 80 daN | ≤ 100 daN | ≤ 120 daN

serie L / L series

30/A · 30/L H44 · 30/L/SF H44 · 30/L H47.5 · 30/L/SF H47.5 · 36/L · 36/L/SF · 40/L · 40/LFT · 40/L/SF · 50/L · 50/LFT · 50/L/SF · 60/L · 60/LFT · 60/L/SF · 75/L · 75/LFT · 75/L/SF

FISSAGGI STANDARD SUPPORTI L
STANDARD FIXING L SERIES FORKS

B6 · P4 · B8 · P8 · B10 · F · P5

NYLON	30/N 36/N	30/L/N H44 30/L/N H47.5	36/L/N	40/L/N 40/LFT/N	50/L/N 50/LFT/N	60/L/N 60/LFT/N	75/L/N 75/LFT/N	
GOMMA SINTETICA SYNTHETIC RUBBER	30/SR 36/SR	30/L/SR H44 30/L/SR H47.5	36/L/SR	40/L/SR 40/LFT/SR	50/L/SR 50/LFT/SR			
GOMMA RUBBER				40/L/G 40/LFT/G	50/L/G 50/LFT/G	60/L/G 60/LFT/G	75/L/G 75/LFT/G	
POLIURETANO POLYURETANE		30/L/PU H44 30/L/PU H47.5	36/L/PU	40/L/PU 40/LFT/PU	50/L/PU 50/LFT/PU			

serie ML / ML series

50/ML · 50/MLFT · 50/ML/SF · 60/ML · 60/MLFT · 60/ML/SF

serie 2 / 2 series

36/2/ · 50/2/17 · 50/2 · 50/2FT

FISSAGGI STANDARD SUPPORTI SERIE: ML M 2
STANDARD FIXING ML SERIES FORKS: ML M 2

B10 · P1 · F · P7

NYLON	50/ML/N 50/MLFT/N	60/ML/N 60/MLFT/N	NYLON	36/2/N	50/2/N/17	50/2/N 50/2FT/N · 50/2/NSF
GOMMA SINTETICA SYNTHETIC RUBBER	50/ML/SR 50/MLFT/SR		GOMMA SINTETICA SYNTHETIC RUBBER	36/2/SR	50/2/SR/17	50/2/SR 50/2FT/SR
GOMMA RUBBER	50/ML/G 50/MLFT/G	60/ML/G 60/MLFT/G	GOMMA RUBBER		50/2/G/17	50/2/G 50/2FT/G
POLIURETANO POLYURETANE	50/ML/PU 50/MLFT/PU		POLIURETANO POLYURETANE	36/2/PU	50/2/PU/17	50/2/PU 50/2FT/PU

serie M / M series

35/M · 35/MF · 50/M · 50/MFT · 50/M/SF · 60/M · 60/MFT · 56/M/SF · 75/M-80/M · 75/MFT-80/MFT · 75-80/M/SF · 100/M · 100/MFT · 100/M/SF · 125/M · 125/MFT

EL · A2 · A3

NYLON	35/M/N 35/MF/N	50/M/N 50/MFT/N	60/M/N 60/MFT/N	75-80/M/N 75-80/MFT/N	100/M/N 100/MFT/N	
GOMMA SINTETICA SYNTHETIC RUBBER			60/M/SR 60/MFT/SR	75-80/M/SR 75-80/MFT/SR	100/M/SR 100/MFT/SR	
GOMMA RUBBER		50/M/G 50/MFT/G	60/M/G 60/MFT/G	75-80/M/G 75-80/MFT/G	100/M/G 100/MFT/G	125/M/G 125/MFT/G
POLIURETANO POLYURETANE	35/M/PUC 35/MF/PUC	50/M/PU 50/MFT/PU	60/M/PU 60/MFT/PU	75/M/PU 75/MFT/PU		

serie 230 / 230 series

36/230 · 36/2/30FT · 50/230 · 50/230FT · 65/230 · 65/230FT · 75/2 · 75/2FT

FISSAGGI STANDARD SUPPORTI SERIE: 30 2/30 2
STANDARD FIXING SERIES FORKS: 30 2/30 2

P1 · P3 · P6 · P10 · P2

NYLON	36/230/N 36/230FT/N	50/230/N 50/230FT/N · 50/230/NSF 50/230FT/NSF	65/230/N 65/230FT/N	75/2/N 75/2FT/N	
GOMMA RUBBER	36/230/SR 36/230FT/SR			75/2/SR 75/2FT/SR	
GOMMA+CUSCINETTO RUBBER+BALL BEARING				75/2/G 75/2FT/G	
POLIURETANO POLYURETANE	36/230/PU 36/230FT/PU	50/230/PU 50/230FT/PU		75/2/PU 75/2FT/PU	

serie 30 / 30 series

65/30 · 75-80/30 · 75-80/30FT · 75-80/30/SF · 100/30 · 100/30FT · 100/30/SF · 125/30 · 125/30FT · 125/30/SF

NYLON	65/30/N	75-80/30/N 75-80/30FT/N	100/30/N 100/30FT/N	125/30/N 125/30FT/N	
GOMMA RUBBER		75-80/30/G 75-80/30FT/G	100/30/G 100/30FT/G	125/30/G 125/30FT/G	
GOMMA+CUSCINETTO RUBBER+BALL BEARING		75-80/30/GC 75-80/30FT/GC	100/30/GCC 100/30FT/GCC	125/30/GCC 125/30FT/GCC	
POLIURETANO POLYURETANE	60/30/PU	75/30/PU 75/30FT/PU			

serie 40 / 40 series

60/40 · 60/40/FT · 75-80/40 · 75-80/40/FT · 75-80/40/SF · 100/40 · 100/40/FT · 100/40/SF · 125/40 · 125/40/FT · 125/40/SF

FISSAGGI STANDARD SUPPORTI SERIE: 40
STANDARD FIXING SERIES FORKS: 40

B12 · P9

NYLON	60/40/N 60/40FT/N	75-80/40/N 75-80/40FT/N	100/40/N 100/40FT/N	125/40/N 125/40FT/N	
GOMMA RUBBER		75-80/40/G 75-80/40FT/G	100/40/G 100/40FT/G	125/40/G 125/40FT/G	
GOMMA+CUSCINETTO RUBBER+BALL BEARING		75-80/40/GC 75-80/40FT/GC	100/40/GCC 100/40FT/GCC	100/40/GCC 100/40FT/GCC	
POLIURETANO POLYURETANE	60/40/PU 60/40FT/PU	80/40/PU 80/40FT/PU	100/40/PU 100/40FT/PU	125/40/PU 125/40FT/PU	

Zoom +

Print

Zoom -

UFFICIO TECNICO
DEVELOPMENT DEPT.

ATTREZZERIA
TOOLS AND MOULDS DEPT.

REPARTO STAMPAGGIO
STAMPING SEC.

INIEZIONE TERMOPLASTICA
INJECTION THERMOPLASTIC

REPARTI ASSEMBLAGGIO
ASSEMBLIES DEPARTMENTS

REP.ASSICURAZIONE QUALITA'
QUALITY ASSURANCE
DEPARTMENTS

APPARECCHIATURE PER COLLAUDO DEI PRODOTTI IN CONFORMITA' ALLA NORMA EUROPEA EN 12527
APPARATUS FOR PRODUCTS METHODS IN ACCORDANCE WITH EUROPEAN STANDARD EN 12527

REPARTO SPEDIZIONI
SHIPMENTS DEPT

MAGAZZINO SEMILAVORATI
SEMI-MANUFACTURED PARTS
WAREHOUSE

RACCOMANDAZIONI PER IL CORRETTO IMPIEGO DEL PRODOTTO

In conformita' alla direttiva CEE nr. 83/374 riguardo la responsabilita' del fabbricante (contro difetti occulti del prodotto), informiamo l'utilizzatore di attenersi alla raccomandazioni come segue.

RECOMMENDATIONS FOR THE CORRECT USE OF THE PRODUCT

In conformity with the directive EEC nr. 83/374 concerning the manufacturer's responsibility (against hidden defects of product), we inform the user must comply with the recommendations as follows.

RUOTE E SUPPORTI

CASTORS AND WHEELS

GUIDA ALL'IMPIEGO
INSTRUCTIONS FOR USE

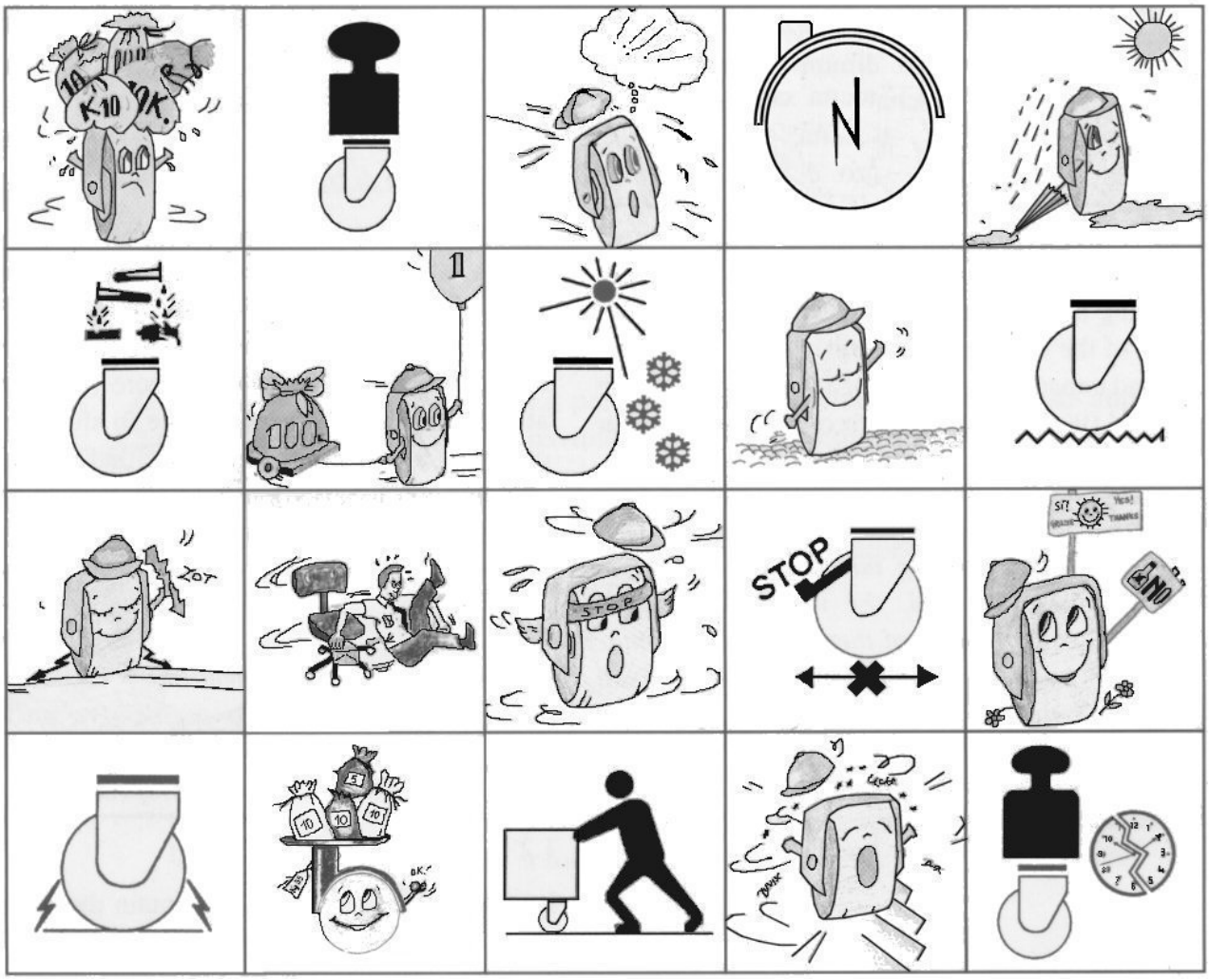

Elaborato da *U.C.I.R. Unione Costruttori Italiani Ruote*
Prepared by *U.C.I.R. Castors and Wheels Italian Manufacturers Union*

1 Scopo
2 Riferimenti
3 Verifica della Scelta
3.1 Portata e Carico Massimo
3.2 Sforzo di traino o spinta
3.3 Velocità
3.4 Frequenza di movimentazione
3.5 Pavimentazione
3.6 Condizioni ambientali
3.7 Conducibilità elettrica ed Antistaticità
3.8 Dispositivi di frenatura e/o bloccaggio
3.9 Dispositivi di frenatura automatici
4 Installazione
4.1 Montaggio della ruota
4.2 Montaggio del supporto
4.3 Montaggio dei supporti a perni di attacco
5 Corretto Impiego
6 Manutenzione
6.1 Verifica e manutenzione della struttura dell'apparecchiatura
6.2 Verifica e manutenzione delle ruote e supporti
6.3 Periodicità di manutenzione
7. Stoccaggio
8 Smaltimento

1 Scope
2 References
3 Verification of the choice
3.1 Load capacity and maximum loading
3.2 Towing or pushing effort
3.3 Speed
3.4 Severity of movement
3.5 Flooring
3.6 Environment conditions
3.7 Electrical conductivity and antistatic properties
3.8 Braking and/or locking devices
3.9 Automatic braking devices
4 Fitting to the equipment
4.1 Fitting of the wheel
4.2 Fitting of the housing
4.3 Fitting of stem castors
5 Correct Use
6 Maintenance
6.1 Equipment structure: inspection and maintenance
6.2 Hpusings and wheels: inspection and maintenance
6.3 Frequency
7 Storage
8 Disposal

1 Scopo

Il presente documento vuole essere di ausilio per l'impiego in sicurezza di ruote, supporti completi e rotelle in modo particolare per:

- Verifica della Scelta
- Installazione
- Corretto Impiego
- Manutenzione
- Stoccaggio
- Smaltimento

Per quanto non contemplato nella presente guida all'impiego rivolgersi al costruttore.

1 Scope

This document is meant to give important information for the choice and the use of castors and wheels.
It should help in the following:

- Choice verification
- Installation
- Correct use
- Maintenance
- Storage
- Disposal

For any requirements whose scope or use is not covered by the instructions herein, revert to the manufacturer .

2 Riferimenti

Le specifiche tecniche del prodotto sono riportate sul catalogo del Costruttore.

2 References

The technical specifications of the product are listed on the general catalogue of the Manufacturer.

3 Verifica della Scelta

3 Verification of the choice

3.1 Portata e Carico Massimo

La portata, dichiarata dal Costruttore, è il valore massimo espresso in DaN* cui possono essere sottoposti, senza pregiudicarne il funzionamento, una ruota, un supporto o una rotella.
Il carico è il valore, espresso in DaN, ottenuto sommando il peso da trasportare alla tara del mezzo di trasporto.

3.1 Load capacity and maximum loading

The load capacity, stated by the manufacturer, is the maximum load (in DaN)* that a castor, housing or wheel can bear without prejudice to its performance.
The load is a value expressed in DaN and obtained by adding the weight to be carried to the unladen weight of the means of transport.

ATTENZIONE: Verificare l'idoneità della portata in funzione della natura del carico, della disposizione delle ruote, del numero di esse sempre a contatto con il suolo e di eventuali altre condizioni come di seguito specificato (vedi punto 5)

* 1 daN = 1,02 kgf

WARNING: Verify the suitability of load capacity taking into account the nature of the load, location of the wheels, the number of wheels always in contact with the ground and other circumstances as stated below (see clause 5).

** 1 daN = 1,02 kgf*

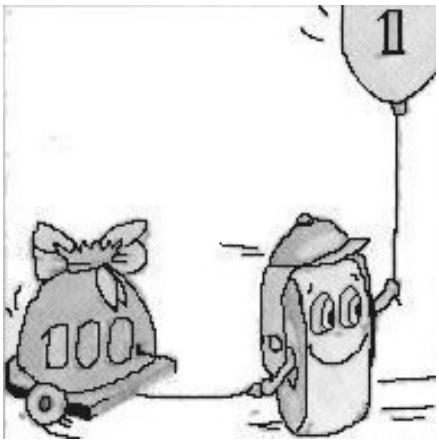

3.2 Sforzo di traino o spinta

E' la forza necessaria per mantenere in movimento a velocità costante l'apparecchiatura.
Verificare comunque che lo sforzo necessario alla movimentazione dell'apparecchiatura con il carico previsto sia compatibile con le disposizioni vigenti in materia di ergonomia.

ATTENZIONE: La forza richiesta per mettere in movimento l'apparecchiatura è superiore alla forza di traino o spinta; potrebbe essere superiore anche del 30%.

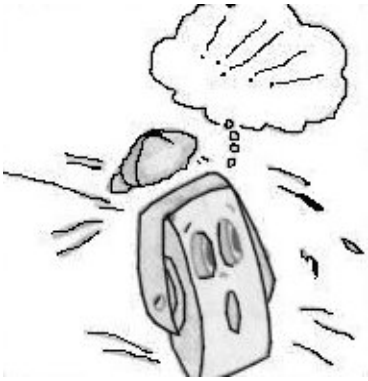

3.2 Towing or pushing effort

It is the force required to keep the equipment moving at a constant speed.
Verify anyhow whether the force required to move the equipment with the established load conforms to the ruling regulations concerning ergonomics.

WARNING: The force required to get the equipment moving is higher than the towing or pushing effort; it could be even 30% more.

3.3 Velocità

Le velocità massime cui sono riferite le portate nominali sono specificate nel Catalogo del Costruttore.

ATTENZIONE: Verificare che la velocità massima di impiego non ecceda quella dichiarata dal Costruttore.

3.3 Speed

Maximum speeds to which the rated load capacities refer, are specified in the Manufacturer's catalogue.

WARNING: Make sure that the maximum operative speed of the application doesn't exceed the limit declared by Manufacturer.

3.4 Frequenza di movimentazione

La portata nominale è riferita a movimentazione manuale con interruzioni di funzionamento.

ATTENZIONE: Per funzionamento continuo o movimentazione motorizzata contattare il Costruttore.

3.4 Severity of movement

The load capacity is referred to manually propelled, non continuous applications.

WARNING: Contact Manufacturer for powered or continuous application.

3.5 Pavimentazione

La portata nominale è riferita ad impiego su pavimentazioni lisce, compatte e in buono stato di manutenzione.

ATTENZIONE: In presenza di pavimentazioni irregolari, ostacoli, dislivelli ecc., il Carico e la Velocità devono essere ridotte!

3.5 Flooring

The load capacity is referred to use on smooth and solid floors, in perfect state of preservation.

WARNING: In case of uneven and irregular floors, obstacles, etc., load and speed are to be reduced!

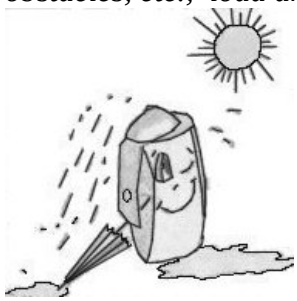

3.6 Condizioni ambientali

Sono considerate condizioni normali:

- temperatura da -5°C a +40° C;
- umidità relativa da 40% a 80%;
- assenza di agenti fisico chimici aggressivi.

ATTENZIONE: per condizioni ambientali diverse, contattare il Costruttore.

3.6 Environmental conditions

The following conditions are considered as being normal:

- temperature range +5°C / +40°C;
- relative humidity from 40% to 80%;
- no aggressive physical or chemical agents.

WARNING: for different environmental conditions, call on the Manufacturer.

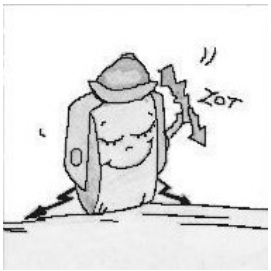

3.7 Conducibilità elettrica ed Antistaticità

Per i prodotti elettricamente conduttivi o antistatici attenersi rigorosamente alle raccomandazioni del Costruttore.
Prodotti conduttivi: $R \leq 10^4\ \Omega$
Prodotti antistatici: $10^5 \leq R \leq 10^7\ \Omega$

ATTENZIONE: Verificare, dopo l'installazione, la conducibilità elettrica o l'antistaticità dall'apparecchiatura .
Attivare inoltre una procedura di manutenzione periodica al battistrada al fine di mantenere entro i limiti i valori di conducibilità o antistaticità.

3.7 Electrical conductivity and antistatic properties

For electrically conductive or antistatic products strictly comply with Manufacturer's recommendations.
Antistatic products: $R \leq 10^4\ \Omega$
Conductive products: $10^5 \leq R \leq 10^7\ \Omega$

WARNING: After installation ascertain the electrical conductivity or antistatic properties of the equipment..
It is necessary, moreover, to introduce a maintenance procedure to periodically check the wheel treads in order to keep conductivity or antistatic features within stated limits.

3.8 Dispositivi di frenatura e/o bloccaggio

I dispositivi di frenatura e/o bloccaggio, salvo diversa indicazione del Costruttore, sono da intendersi di tipo statico (da attivare solo ad apparecchiatura non in movimento).
ATTENZIONE: i dispositivi di frenatura o bloccaggio non sono idonei a sopportare sollecitazioni impulsive o inerziali sull'apparecchiatura; per ulteriori informazioni consultare il Costruttore.

Evitare inoltre l'uso dei dispositivi di frenatura per immobilizzare l'apparecchiatura durante il trasporto

3.8 Braking and/or locking devices

Unless otherwise stated by the Manufacturer, braking and/or locking devices are to be considered suitable for static use only (to be engaged only when equipment is stationary).

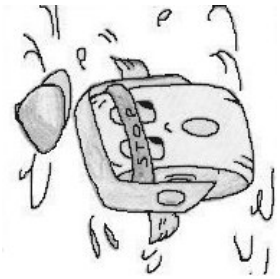

3.9 Dispositivi di frenatura automatici

I dispositivi di frenatura automatici si oppongono, o limitano, automaticamente il movimento non intenzionale delle apparecchiature (sedie, scale, carrelli per tappeti mobili, ecc.).

4 Installazione

Per un buon funzionamento ed una durata adeguata si devono osservare le seguenti istruzioni.

4.1 Montaggio della ruota

- Verificare la resistenza meccanica degli organi di fissaggio (assali, dadi e rondelle) utilizzati in funzione del tipo di montaggio (a sbalzo o forcella) e del carico cui sono sottoposti.
- L'assale deve essere alloggiato orizzontalmente, ortogonale alla direzione di marcia e ne deve essere impedita la rotazione.
- Ad installazione ultimata, controllare la libera rotazione della ruota.

WARNING: braking and/or locking devices are not made to withstand impulsive or inertial forces acting on the appliance. For further details refer to the Manufacturer.

Avoid, moreover, the use of the braking devices to secure the equipment during the transport.

3.9 Automatic braking devices

Automatic braking devices automatically withstand or limit accidental displacement of appliances (chairs, ladders, trolleys for passenger conveyors etc.).

4 Fitting to the equipment

The following instructions shall be complied with for satisfactory performance and suitable lifetime of the products.

4.1 Fitting of the wheel

- Verify the mechanical resistance of the fixing elements (axles, nuts, washers) according to the type of attachment (stub axle or fork mounting) and to the load they are bound to bear.
- The axle shall be in horizontal position, orthogonal to the direction of motion and rotation around its axis shall be prevented.
- After installation ascertain free rotation of the wheel

4.2 Montaggio del supporto

La struttura dell'apparecchiatura deve essere dimensionata per sopportare le sollecitazioni cui sarà sottoposta e garantire la complanarità delle superfici di fissaggio.
Queste devono essere piane, orizzontali e di dimensioni tali da consentire l'appoggio completo delle superfici di fissaggio dei supporti.

- Il montaggio dei supporti con fissaggio a piastra deve essere eseguito utilizzando viti, dadi e rondelle di misura e in numero come predisposto dal Costruttore e utilizzando gli utensili appropriati.
- Serrare i dadi o le viti secondo la coppia prevista per gli stessi.
- Per i supporti fissi deve essere garantita l'ortogonalità dell'assale alla direzione di marcia.
- Supporti a codolo liscio richiedono strutture tubolari solo con tolleranze ristrette e di spessore adeguato.
- Codoli con foro trasversale devono essere fissati solo con viti o spine aventi diametro e lunghezza adeguate.
- La struttura tubolare deve appoggiare sulla superficie di fissaggio del supporto come sopra previsto.
- Nel montaggio dei supporti a codolo filettato o a foro passante la superficie di fissaggio del supporto deve aderire a quella dell'apparecchiatura.
- I supporti a foro passante devono essere fissati utilizzando viti del diametro predisposto dal Costruttore.

4.2 Fitting of the castor

The structure of the equipment shall be dimensioned to bear the stresses it will be submitted to and to make sure that the mounting planes be coplanar.
Same shall be flat, horizontal and dimensioned to allow complete resting of the housing's mounting plane.

- Top plate housings shall be fitted by using screws, nuts and washers in size and quantity as required by the manufacturer and using the appropriate tools.
- Tighten nuts or screws according to required torque.
- Fixed housings shall be fitted making sure that the axle is orthogonal with respect to the running direction.
- Stem housings require tubular structures with tight tolerances and adequate thickness.
- Stem housings with cross hole shall be fitted with screws or pins of suitable diameter and length.
- The tubular structure shall rest on the mounting plane of the housing as stated above.
- The mounting plane of threaded stem or bolt hole housings shall adhere to the mounting plane of the equipment.
- Bolt hole housings shall be fitted using bolts with diameter as required by Manufacturer.

ATTENZIONE: Evitare assolutamente il fissaggio del supporto alla apparecchiatura tramite saldatura.

4.3 <u>Montaggio dei supporti a perno di attacco</u>

- Nel montaggio dei supporti a perno di attacco con rotazione inferiore, la cavità dell'apparecchiatura per l'alloggiamento del perno di attacco deve permetterne la facile introduzione garantendone, al contempo, un sicuro fissaggio e la non rotazione al suo interno.
- Nel montaggio dei supporti a perno di attacco con rotazione superiore, la cavità dell'apparecchiatura per l'alloggiamento del perno di attacco deve permetterne la facile introduzione garantendone, al contempo, un sicuro fissaggio e una buona rotazione al suo interno.
- Nel montaggio dei supporti con perno di attacco filettato serrare il perno con coppia adeguata al materiale avente la resistenza meccanica inferiore.

ATTENZIONE: Per condizioni di montaggio diverse contattare il Costruttore.

Nel caso di assemblaggio dei perni di attacco da parte dell'Utilizzatore, questi deve provvedere al controllo della libera rotazione del supporto, della sufficiente lubrificazione degli accoppiamenti e della resistenza all'estrazione del perno stesso.

WARNING: In no case weld the castor to the equipment.

4.3 <u>Fitting of castors with stem</u>

- When assembling stem castors which should allow rotation in the lower part, the cavity of the equipment housing
  the stem should allow easy introduction of the latter and
  should guarantee a safe grip and prevent rotation of the stem .
- When assembling stem castors which should allow rotation in the upper part, the cavity of the equipment housing
  the stem should allow an easy introduction of the latter and
  should guarantee, at the same time, perfect fitting and smooth
  rotation of the stem.
- When assembling castors with threaded stem, tighten the stem
  applying a torque suitable for the material featuring the lowest mechanical resistance.

WARNING: For differing assembling conditions call on the Manufacturer.

In case of attachment stem assembled by the User, he should control lubrication of couplings, free swivelling of the castor and sufficient resistance to stem extraction.

5 Corretto Impiego

Al fine di un corretto impiego del prodotto, sono da evitare assolutamente :

- i sovraccarichi;
- la distribuzione non uniforme del carico;
- l'applicazione violenta del carico;
- i lunghi periodi di stazionamento sotto carico;
- gli urti e le collisioni
- la caduta da dislivelli;
- l'utilizzo dei dispositivi di bloccaggio e/o frenatura con l'apparecchiatura in movimento;
- la movimentazione dell'apparecchiatura con i dispositivi di bloccaggio e/o frenatura inseriti*;
- lo stazionamento dell'apparecchiatura con i dispositivi di bloccaggio e/o frenatura inseriti su pendenze superiori al 3%;
- il lavaggio con detergenti chimicamente aggressivi;
- la sostituzione della ruota e/o del supporto con ricambi che non siano conformi a quanto specificato dal Costruttore della macchina e/o attrezzatura.

* fatta eccezione ai freni automatici specificamente predisposti

5 Correct Use

To assure proper use of the product the following shall be avoided:

- overloading;
- uneven distribution of load;
- violent application of load;
- parking under load for long periods of time;
- shocks and collisions
- fall from steps;
- engaging of the braking and/or locking devices while the equipment is moving;
- displacement of the equipment with engaged* braking and/or locking devices ,
- parking the equipment with braking and/or locking devices engaged on slopes exceeding 3%;
- washing with chemically aggressive detergents;
- replacement of the housing and/or wheel with spare parts not conforming to specifications provided by the manufacturer of the machine and/or the equipment.

- excepted for automatic brakes specifically designed for this purpose.

6 Manutenzione

Predisporre piani di manutenzione che prevedano le ispezioni sotto elencate, con frequenza adeguata alle condizioni di impiego (vedi punti da 3.1 a 3.9).

6.1 Verifica e manutenzione della struttura dell'apparecchiatura

a) Verificare i danneggiamenti al basamento che possano aver compromesso il corretto fissaggio del prodotto.
b) Verificare il corretto serraggio degli elementi di fissaggio del prodotto al basamento.

Ripristinare le condizioni di installazione raccomandate (vedi punto 4).

6 Maintenance

Maintenance plans including the inspections below, shall be adopted with a frequency related to the application's severity of use (see points from 3.1 to 3.9)

6.1 Equipment structure: inspection and maintenance

a) Verify possible structural damages to the frame that may be of prejudice to the correct fitting of the product.
b) Check proper tightening of the elements securing the product to the frame.

Restore the recommended assembling requirements (see clause 4).

6.2 Verifica e manutenzione delle ruote e supporti

a) Verificare che il prodotto sia integro, funzionante e senza eccessivi giochi, usure, deformazioni o lacerazioni.
b) Verificare l'efficacia dei dispositivi di frenatura e/o bloccaggio ove presenti.
c) Verificare che le condizioni ambientali non abbiano alterato il prodotto (presenza di ossidazione, corrosione, corpi estranei, ecc.) pregiudicandone il buon funzionamento.
d) Per i prodotti che devono assicurare la conducibilità elettrica o l'antistaticità, pulire la fascia di rotolamento ed eseguire la verifica come da punto 3.7.
e) Verificare il corretto serraggio dell'assale della ruota o del perno di attacco ripristinando la coppia prevista.
f) Ripristinare la lubrificazione degli organi in movimento con lubrificanti idonei all'impiego del prodotto.
g) Per le ruote pneumatiche ripristinare la pressione ai valori raccomandati dal Costruttore.

ATTENZIONE: Prodotti non rispondenti alle verifiche di cui sopra devono essere sostituiti.

6.3 Periodicità

Lo schema riporta l'intervallo di tempo massimo che intercorre tra due verifiche successive.

6.2 Castors and wheels: inspection and maintenance

a)Verify that the product is integral, functioning, and without excessive play, wear, tears or deformations;
b) Verify the efficiency of the braking and/or locking devices, where applying;
c) Make sure that environmental conditions did not alter the product (presence of oxidation, corrosion, foreign matters etc.) causing prejudice to its performance;
d) Electrically conductive or antistatic products: clean the tread and check as per point 3.7.;
e) Verify proper tightening of the wheel axle or of the attachment stem, restoring the required torque;
f) Restore the lubrication of the moving parts using suitable lubricant.
g) Restore pneumatic wheels to the Manufacturer's recommended pressure.

WARNING: Products non conforming to the above checks must be replaced.

6.3 Frequency

This table states the maximum time interval between two inspections .

VERIFICHE E MANUTENZIONE	**MESI**			**RIFERIMENTO**
	3	**6**	**12**	
Danneggiamento al basamento			*	6.1 a)
Serraggio elementi di fissaggio		*		6.1 b)
Integrità del prodotto		*		6.2 a)
Efficacia dispositivi di frenatura	*			6.2 b)
Alterazione del prodotto		*		6.2 c)
Proprietà elettriche	*			6.2 d)
Serraggio assale ruota e perni di attacco		*		6.2 e)
Ripristino lubrificazione		*		6.2 f)
Ripristino pressione dei pneumatici	*			6.2 g)

ATTENZIONE: Dopo ogni lavaggio dei prodotti ripristinarne la lubrificazione.

INSPECTIONS AND MAINTENENCE	MONTHS			REFERENCES
	3	6	12	
Damages to equipment structure			*	6.1 a)
Tightening of fitting elements		*		6.1 b)
Product integrity		*		6.2 a)
Efficiency of braking devices	*			6.2 b)
Product alteration		*		6.2 c)
Electrical properties	*			6.2 d)
Wheel axle and attachment stem torque		*		6.2 e)
Relubrication		*		6.2 f)
Pneumatic tyres: pressure adjustment	*			6.2 g)

WARNING: Restore lubrication of the product after each washing cycle

7. Stoccaggio

I prodotti devono essere conservati in locali ben areati, senza umidità eccessiva, aventi escursione termica compresa tra -10° C e +40° C e protetti dalla polvere. Evitare nel modo più assoluto l'esposizione diretta ai raggi solari per lunghi periodi di tempo. Evitare lo stoccaggio prolungato.

ATTENZIONE: Si raccomanda il montaggio dei componenti o dei prodotti finiti previa stabilizzazione a temperatura non inferiore a +10° C.

7 Storage

Products shall be stored in well ventilated areas, without excessive humidity, with temperatures ranging from -10°C to +40°C and protected against dust. Definitely avoid exposing the product to direct sunlight over long periods of time. Do not store the product during long periods of time.

WARNING: Assembling of the different components or products should take place after allowing for equilibration conditioning at a temperature not lower than +10° C.

8 Smaltimento

Per lo smaltimento del prodotto l'Utilizzatore deve attenersi alle prescrizioni di legge per la tutela dell'ambiente.

8 Disposal

For product disposal, User should comply with environment protection laws.

FORMATI DI IMBALLO DISPONIBILI.
PACKAGING SIZES AVAILABLE FOR YOUR LOGISTICS.

SCATOLA CARTONE PICCOLA
SMALL CARTON BOX

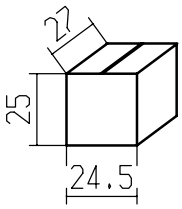

MAX 36 SCATOLE PICCOLE
MAX 36 SMALL BOXES

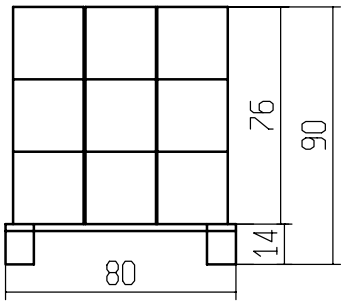

SCATOLA CARTONE GRANDE H80
BIG CARTON BOX H80

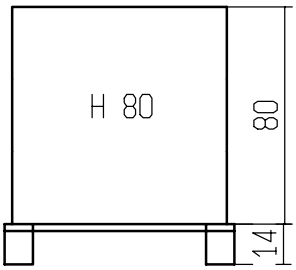

SCATOLA CARTONE GRANDE H54
BIG CARTON BOX H54

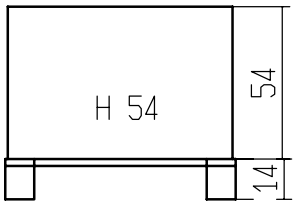

SCATOLA CARTONE GRANDE H33
BIG CARTON BOX H33

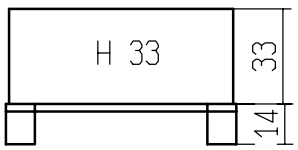

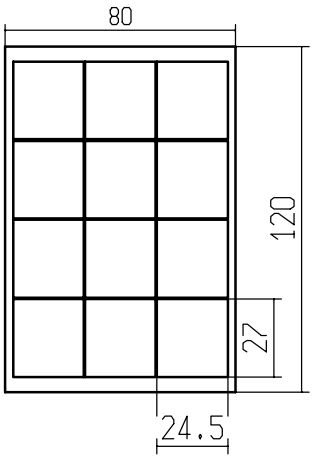

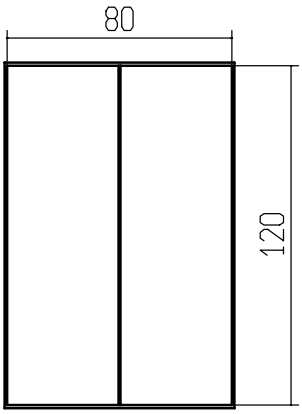

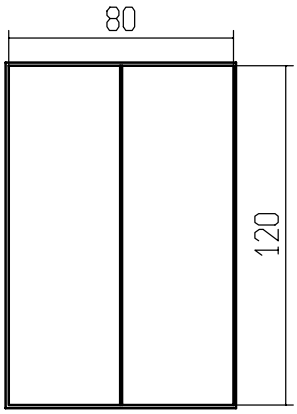

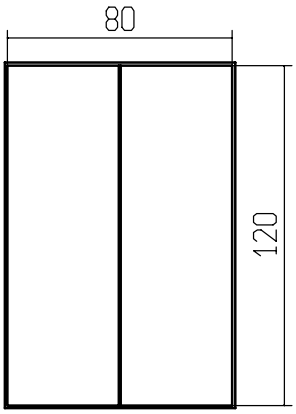

tutte le dimensioni sono espresse in cm
all dimensions are expressed in cm

SIMBOLI USATI NELLE SIGLE DI IDENTIFICAZIONE
SYMBOLS USED IN IDENTIFICATION INITIALS

Diametri disponibili nelle varie serie, di nostra fabbricazione. Diameters available in the different series of our production	Lettera o numero di identificazione della serie Series identification number or letter	Lettera di identificazione delle caratteristiche funzionali del supporto Identification letter of the functional characteristics of the fork	Lettera di identificazione del battistrada Tread identification letter of tyre	Lettera di identificazione accessori della ruota Identification letter of wheel accessories	Lettera di identificazione del tipo di fissaggio del supporto Identification letter of fork fixing type
ø30 ø36 ø40 ø45 ø50 ø60 ø65 ø75 ø80 ø100 ø125	L LINOX LM ML M 30 40 2 2 30 W A S PD	SF= Supporto fisso SF= Fixed fork FT= Freno totale FT= Total brake	G= Gomma G= Rubber GA= Gomma Antistatica GA= Antistatic Rubber PU= Poliuretano PU= Polyrethane SR= Gomma sintetica SR= Synthetic rubber N= Nylon N= Nylon PD= Polverino PD= Powder	d= Dischi parafili in ferro zincato d= Threadguards in galvanised iron d= Dischi parafili NYLON d= NYLON Threadguards C= Cuscinetti di rotolamento C= Ball bearing CC= Cuscinetto centrale CC= Central bearing	O= Foro passante ø12 O= Bolt hole ø12 B/8= ø8 B/8= ø8 B/10= ø10 B/10= ø10 B/12= ø12 B/12= ø12 B/13= ø13 B/13= ø13 F= Perno a filetto F= Threaded stem PI= Piastra integrale PI-P1-P2-P3-P4-P5-P6-P7-P8-P9 PI= Integral plate PI-P1-P2-P3-P4-P5-P6-P7-P8-P9 E= Espansore E= Expander EL= Espansore lungo EL= Long expander A= Angolare A= Angular fitting C= Codulo liscio+ adattatore C= Smooth stem+ Adaptor

SIMBOLI USATI NELLE SIGLE DI IDENTIFICAZIONE DEI PARAMETRI DIMENSIONALI
SYMBOLS USED IN THE IDENTIFICATION INITIALS OF THE DIMENSIONAL PARAMETERS

A	Diametro della Ruota Wheel Diameter
H	Altezza supporto Fork Height
B	Disassamento della ruota Castor offset
E-F	Diametro foro assale ruota Wheel axle hole diameter
F	Ingombro rotazione leva ruota Castor lever rotation space
	"BOLLINO GIALLO " Contrassegno di identificazione per ruota conduttiva. "YELLOW DOT" distinctive sign of identification for conductive wheels.
	"QUADRATO VERDE" prodotti in fase di progettazione. "GREEN SQUARE" products in project stage.

SIMBOLI USATI NELLE SIGLE DI IDENTIFICAZIONE DEI REQUISITI DEI PRODOTTI SYMBOLS USED IN THE IDENTIFICATION INITIALS OF THE PRODUCT REQUIREMENTS	
gr	Peso per un pezzo Weight for piece
daN D	Portata Dinamica Dynamic load capacity
daN S	Portata Statica Static load capacity
daN FT	Resistenza passiva del dispositivo frenante Passive resistance of braking device
daN FR	Resistenza al Rotolamento alla portata nominale Rolling resistance at rated capacity
daN FO	Resistenza al Superamento Ostacolo alla portata nominale Resistance to overcoming obstacles at rated capacity
Ω hom	Conducibilita' Elettrica Electrical conductivity

Prestazioni del prodotto

I requisiti attribuiti ai prodotti presentati nel catalogo sono stati ricavati applicando
i metodi di prova previsti dalla norma
EN 12527 Ruote e supporti - Metodi di prova ed apparecchiature.
Sono conformi criteri di accettazione previsti dalla norma
EN 12530 Ruote e supporti – Ruote e supporti per attrezzature mobili a propulsione manuale per comunità.-
Nelle pagine successive sono indicati:

1) **schemi delle prove di riferimento**
2) **verbali di autocertificazione producibili su richiesta del cliente**

I materiali impiegati nei componenti che AL.FER utilizza nei prodotti, sono garantiti dai suoi fornitori conformi alla normativa **ROHS 2002/95/CE**.

Performances of product

The specifications of the products presented in the catalogue have been obtained by applying the test methods provided for by the rule
EN 12527 Castors and wheels - Test methods and apparatus
They are in conformity with the acceptance standards provided for by the rule
EN 12530 Castors and wheels – Castors and wheels for manually propelled institutional applications.-

In the following pages are shown:

1) **outlines of reference tests**
2) **self-certification available on customer request**

Materials of the parts that AL.FER uses for its products are guaranteed from its suppliers in conformity with the rules **ROHS 2002/95/CE**.

APPARECCHIATURA di VERIFICA REQUISITI DEL PRODOTTO :
PRODUCT REQUIREMENTS CHECK APPAREITUS :

PORTATA DINAMICA
DYNAMIC LOAD CAPACITY

PORTATA STATICA
STATIC LOAD CAPACITY

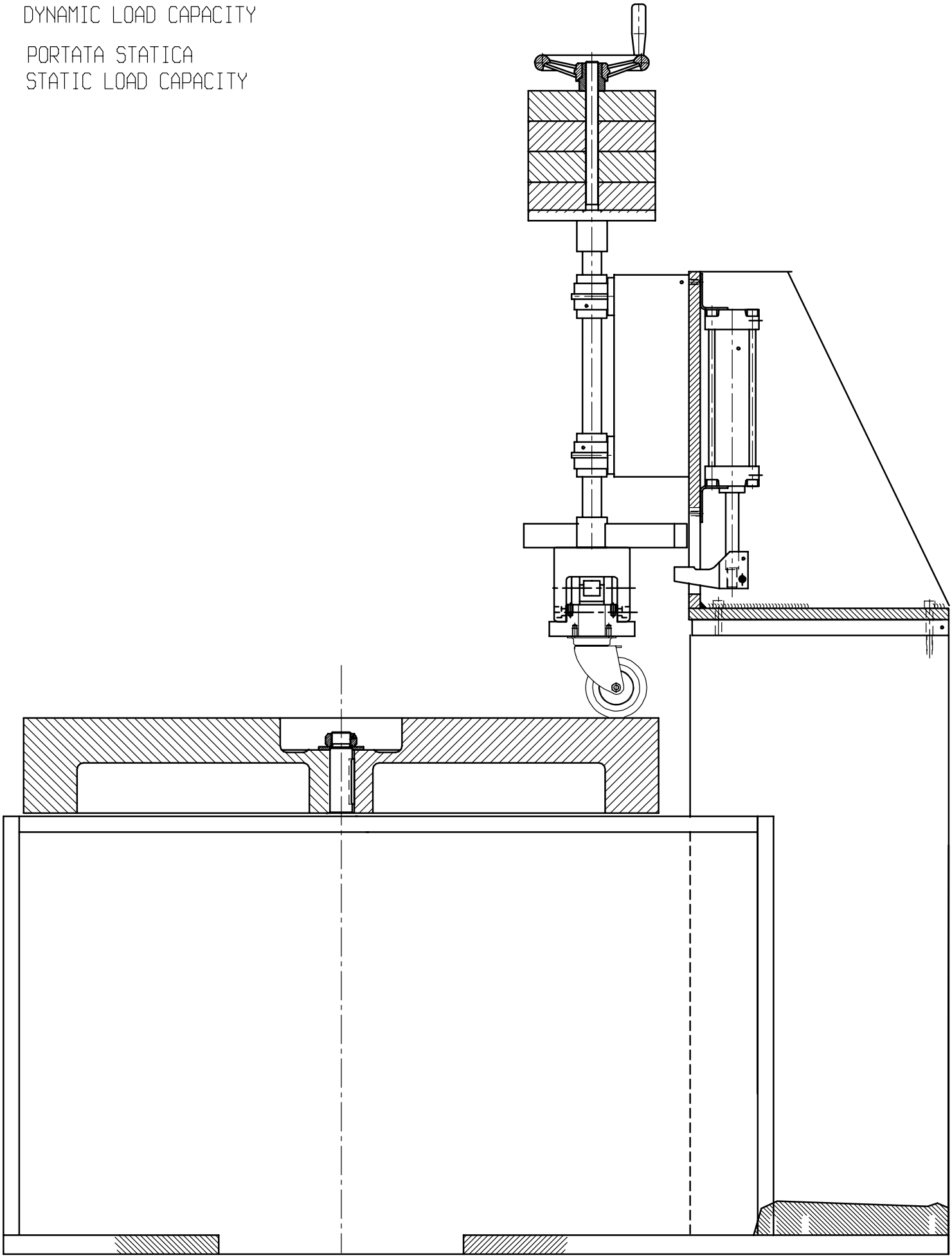

APPARECCHIATURA di VERIFICA REQUISITI DEL PRODOTTO :
PRODUCT REQUIREMENTS CHECK APPARATUS :

VERIFICA SFORZO DI APPLICAZIONE DISPOSITIVO DI FRENATURA

TEST OF BRAKING DEVICE APPLICATION EFFORT

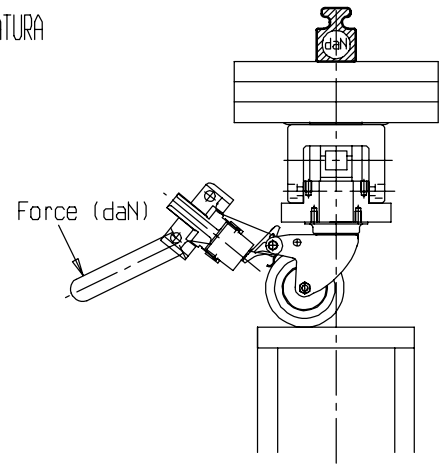

PROVA DI FATICA MOLLA FRENO

FATIGUE TEST FOR BRAKING SPRING

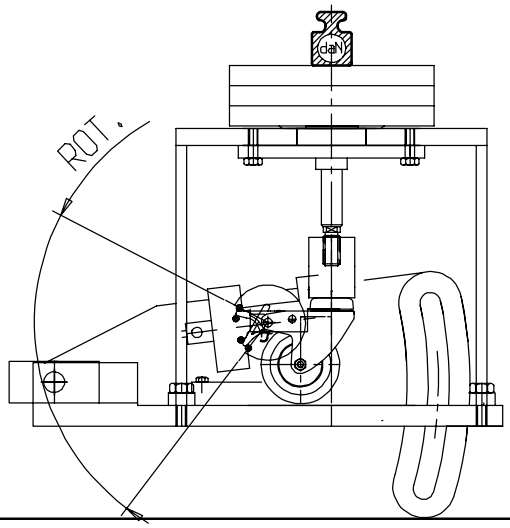

PROVA DI RESISTENZA PASSIVA del FRENO sulla RUOTA

PASSIVE RESISTANCE TEST OF BRAKE ON THE WHEEL

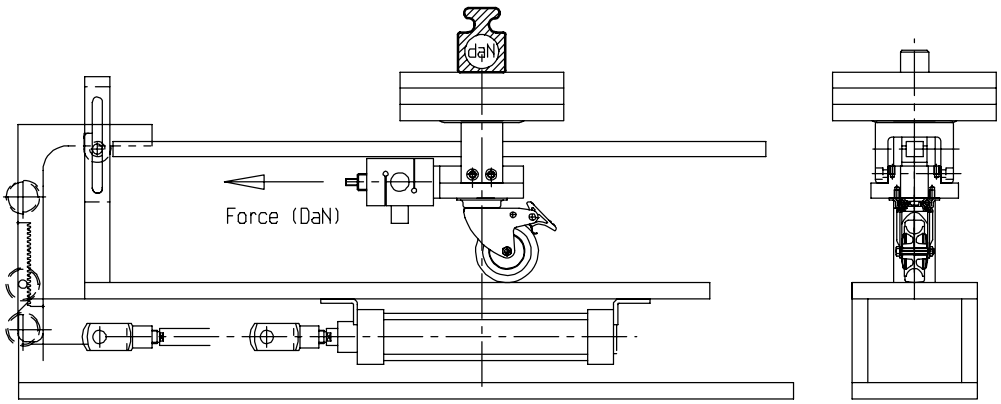

PROVA DI RESISTENZA PASSIVA del FRENO sul SUPPORTO

PASSIVE RESISTANCE TEST OF BRAKE ON HOUSING

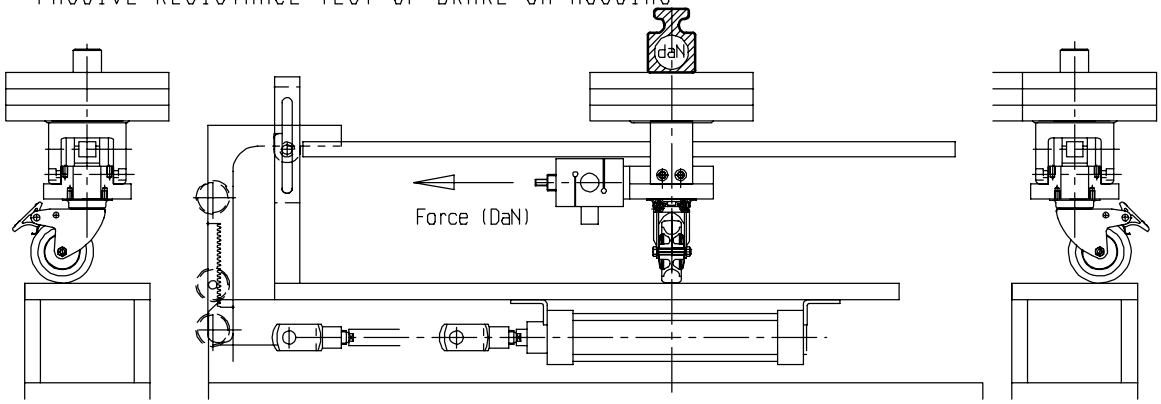

APPARECCHIATURA di VERIFICA della CONDUCIBILITÀ ELETTRICA

ELECTRICAL CONDUCTIVITY CHECK APPARATUS

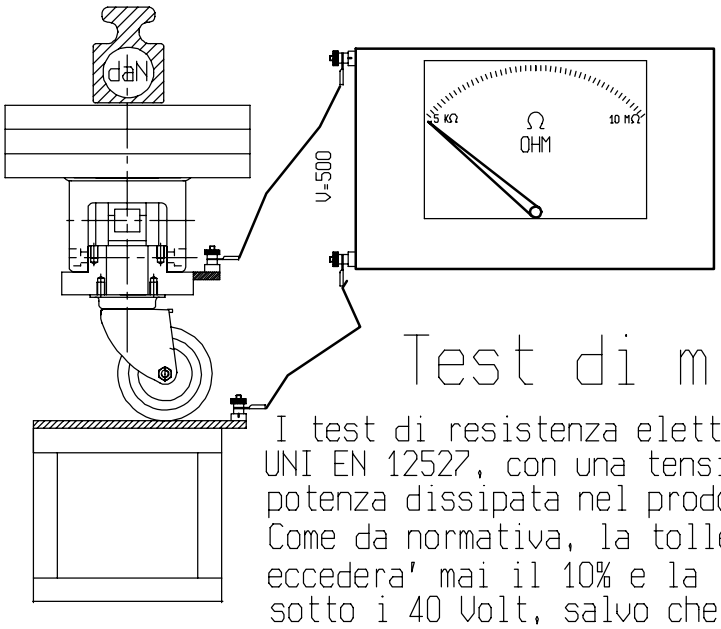

Test di misura elettrica

I test di resistenza elettrica vengono eseguiti secondo la normativa UNI EN 12527, con una tensione nominale a vuoto di 500 V d.c. e con potenza dissipata nel prodotto non superiore a 3 W.
Come da normativa, la tolleranza di misura della resistenza non eccedera' mai il 10% e la tensione di prova non scendera' mai sotto i 40 Volt, salvo che la potenza dissipata nel prodotto superi i 3 Watt.

Electrical measurement Test

Electrical resistance tests are carried out in accordance with the rule UNI EN 12527, with an idling nominal tension of 500 V.d.c and with power dissipated into the product not exceeding 3 W.
According to the rule, the tolerance of resistance measurement will never exceed 10% and the test tension will never go under 40 Volt. unless the power dissipated into the product exceed 3 Watt.

VERBALE DI VALUTAZIONE dei COMPLESSIVI RUOTA+SUPPORTO

AL.FER s.r.l.
Via Castagnini n.25
Tel. 051/728569 - Fax 051/728166
40012 CALDERARA R. (BO)

NR.LOTTO CUFFIA .....
NR.LOTTO CUSC.SUP. .....
NR.LOTTO CUSC.INF. .....

Data:	Cod. Art.:	Descrizione:	Responsabile prove:

Requisiti iniziali Ruota

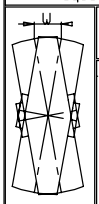

Diametro ruota (D) mm	Gioco iniz. max in organi rotolamento W mm	Gioco iniz. rilevato W mm
50	0.70	_
60	0.70	_
75	0.80	_
80	0.80	_
100	1.00	_
125	1.25	_
150	1.60	_
160	1.60	_
200	2.00	_

Requisiti iniziali Supporto

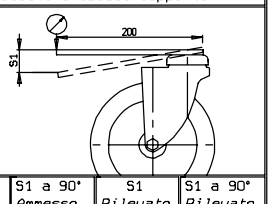

S1 Ammesso	S1 a 90° Ammesso	S1 Rilevato	S1 a 90° Rilevato
4mm	4mm	...mm	...mm

TEST - DINAMICO

Modalita' di Prova

Temperatura di Prova C°	20±
Velocita' di impatto dell'ostacolo	3 Km/h
Altezza dell'ostacolo previsto 3% ø Ruota	.... mm
Numero di ostacoli previsto ø Ruota mm X10	....
Numero di ostacoli superati	....
Massa reale applicata * 1 Kg = 0.98062 daN	.... kg
Tempo di un ciclo previsto — T. marcia / T. pausa	6'
T. Marcia applicato 3"	T. Pausa applicato 3"

Percorso di Prova

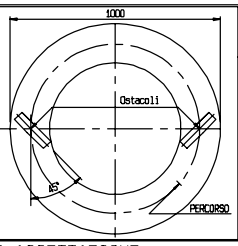

rilievo rumore

CRITERI DI ACCETTAZIONE

RUOTA

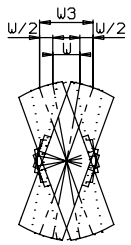

Diametro ruota (D) mm	Incremento in gioco max dovuto all'usura W2 mm
50	0.40
60	0.60
75	0.64
80	0.64
100	0.80
125	1.00
150	1.28
160	1.28
200	1.60

Valori rilevati	
W2	...
W3	...

SUPPORTO

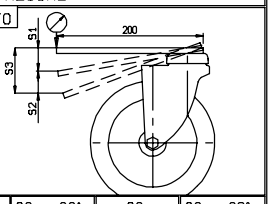

S3 Ammesso	S3 a 90° Ammesso	S3 Rilevato	S3 a 90° Rilevato
8.00mm	8.00mm	....mm	....mm

S2 Ammesso	S2 a 90° Ammesso	S2 Rilevato	S2 a 90° Rilevato
4.00mm	4.00mm	....mm	....mm

rilievi visivi:ruota

rilievi visivi:supporto

CASTORS (WHEEL+HOUSING) RATING REPORT

AL.FER s.r.l.
Via Castagnini n.25
Tel. 051/728569 - Fax 051/728166
40012 CALDERARA R. (BO)

FORK LOT NR. .....
UPP.BEAR.LOT NR. .....
LOW.BEAR.LOT NR. .....

Date:	ART. CODE:	DESCRIPTION	TEST INSPECTOR:

WHEEL INITIAL REQUIREMENTS

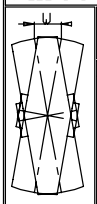

WHEEL DIAMETER (D) mm	Max initial backlash of rolling p.(w) mm	Measured initial backlash(W) mm
50	0.70	_
60	0.70	_
75	0.80	_
80	0.80	_
100	1.00	_
125	1.25	_
150	1.60	_
160	1.60	_
200	2.00	_

HOUSING INITIAL REQUIREMENTS

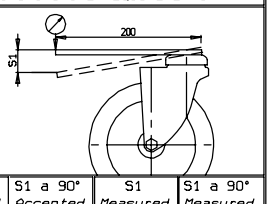

S1 Accepted	S1 a 90° Accepted	S1 Measured	S1 a 90° Measured
4mm	4mm	...mm	...mm

DYNAMIC - TEST

Test method

Test temperature C°	20±
Obstacle impact speed	3 Km/h
Estimated obstacle height 3% ø Wheel	.... mm
Number of estimated obstacles ø Weel mm X10	....
Number of passed obstacles	....
Applied true mass * 1 Kg = 0.98062 daN	.... kg
Estimated time for 1 cycle — Punning time / Pause time	6'
Running time 3"	Pause time 3"

Test run

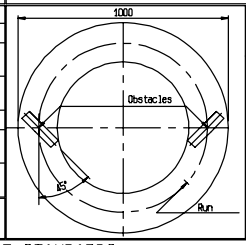

Noise remark

ACCEPTANCE STANDARDS

WHEEL

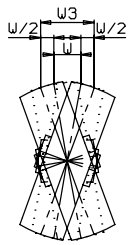

WHEEL DIAMETER (D) mm	Max. backlash increase due to wear W2 mm
50	0.40
60	0.60
75	0.64
80	0.64
100	0.80
125	1.00
150	1.28
160	1.28
200	1.60

Measures found	
W2	...
W3	...

HOUSING

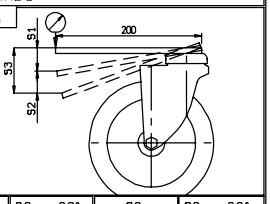

S3 Accepted	S3 a 90° Accepted	S3 Measured	S3 a 90° Measured
8.00mm	8.00mm	....mm	....mm

S2 Accepted	S2 a 90° Accepted	S2 Measured	S2 a 90° Measured
4.00mm	4.00mm	....mm	....mm

WHEEL VISUAL REMARKS:

HOUSING VISUAL REMARKS:

VERBALE DI VALUTAZIONE DEL SUPPORTO

AL.FER s.r.l.
Via Castagnini n.25
Tel. 051/728569 - Fax 051/728166
40012 CALDERARA R. (BO)

Data:	Cod. Art. N.	Descrizione:	Responsabile prove: - - - - - -

Requisiti iniziali Supporto

S1 Ammesso	S1 a 90° Ammesso	S1 Rilevato	S1 a 90° Rilevato
4 mm	4 mm	.. mm	.. mm

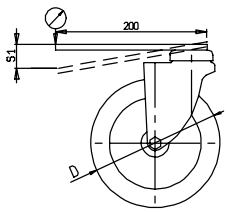

TEST - DINAMICO

Modalita' di prova

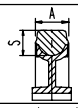

Shore A Durezza	Shore A	...
	A	...
	S	...
Temperatura di prova C°		±20°
Velocita' di impatto dell' ostacolo		3 Km/h
Altezza dell' ostacolo previsto 3% ø Ruota		.... mm
Numero di ostacoli previsto ø Ruota ( )mm X 10		....
Numero ostacoli superati		....
Massa reale applicata * 1 Kg = 0.98062 daN		.... daN
Tempo di un ciclo previsto — T. marcia / T. pausa		6'
T. Marcia applicato 3'	T. Pausa applicato 3'	

Percorso di prova

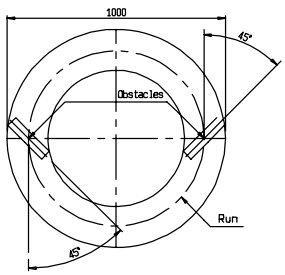

CRITERI DI ACCETTAZIONE

Requisiti finali supporto

S3 Ammesso	S3 a 90° Ammesso	S3 Rilevato	S3 a 90° Rilevato
8 mm	8 mm	....mm	....mm

S2 Ammesso	S2 a 90° Ammesso	S2 Rilevato	S2 a 90° Rilevato
4 mm	4 mm	....mm	....mm

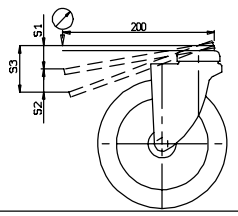

Rilievi visivi: supporto

HOUSING RATING REPORT

AL.FER s.r.l.
Via Castagnini n.25
Tel. 051/728569 - Fax 051/728166
40012 CALDERARA R. (BO)

Date:	Art. Code N°	Description:	Test Inspector: - - - - - -

Housing initial requirements

S1 Admitted	S1 a 90° Admitted	S1 Found	S1 a 90° Found
4 mm	4 mm	.. mm	.. mm

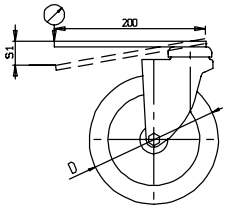

DYNAMIC - TEST

Test method

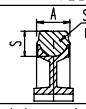

Shore A Hardness	Shore A	...
	A	...
	S	...
Test temperature C°		±20°
Obstacle impact speed		3 Km/h
Required obstacle height 3% ø Wheel		.... mm
Number of required obstacles ø Wheel ( )mm X 10		....
Number of exceeded obstacles		....
Applied real mass * 1 Kg = 0.98062 daN		.... daN
Required time for 1 cycle — Running time / Pause time		6'
Applied running time 3"	Applied pause time 3"	

Test run

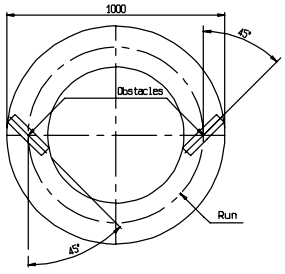

ACCEPTANCE CRITERIA

Housing final requirements

S3 Admitted	S3 a 90° Admitted	S3 Found	S3 a 90° Found
8 mm	8 mm	....mm	....mm

S2 Admitted	S2 a 90° Admitted	S2 Found	S2 a 90° Found
4 mm	4 mm	....mm	....mm

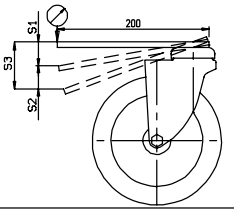

pag_006B

Visual remarks Housing:

NUOVI PRODOTTI ATTUALMENTE DISPONIBILI
NEW PRODUCTS CURRENTLY AVAILABLE

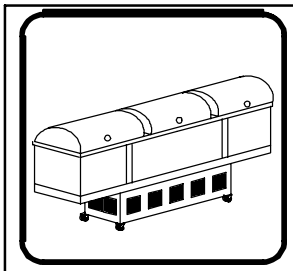

SERIE 230 ø36-ø50-ø65

RUOTA PU <140daN

–RUOTE GEMELLATE PER IMPIEGHI DINAMICI DI TIPO MEDIO PESANTE CON ALTEZZA CONTENUTA
–TWIN CASTORS FOR DYNAMIC MEDIUM-HEAVY DUTY USE WITH RESTRAINED HEIGHT
–SERIE 230 from page 155 to 162

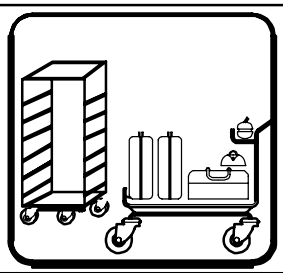

SERIE 40 ø60-75-80-100-125

RUOTA GOMMA <150daN

–ROTELLE PER IMPIEGHI DINAMICI DI TIPO MEDIO-PESANTE
–CASTORS FOR DYNAMIC MEDIUM-HEAVY DUTY USE
–SERIE 40 from page 118 to 137

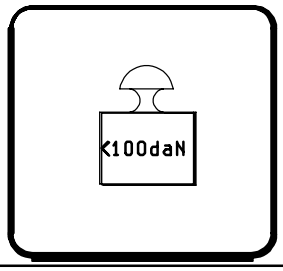

SERIE M

RUOTA 35MPUc <100daN

–NUOVI SUPPORTI E COMPLESSIVI GIREVOLI ø35
–NEW SWIVEL FORKS AND CASTORS ø35
– from page 67 to 85

NUOVI MODELLI di RUOTE:

35/M/PUc , 35/M/N — FROM PAGE 67 TO 85
50/M/Gcc , 60/M/Gcc , 100/M/Gcc
75/M/PU

60/30/PU, 75/30/PU — FROM PAGE 87 TO 117

60/40/N , 80/40/N , 100/40/N — FROM PAGE 118 TO 137

Requisiti Ruote Serie L ø30 36 40 45 50,nelle varie tipologie di: Battistrada, Organi di Rotolamento
L series wheels Requirements from:ø30toø50 in the varius types of,Tyres, Rolling parts

Ruota tipo Wheel type	G	Gd	GCC	GdA	GcA	PU	SR	SRd	N	Nd
Catteristiche del Battistrada Tyre characteristics	Gomma Grigia Grey Rubber		Anello Gomma Grigia Grey Rubber Ring	Anello Gomma Conduttiva Nera Conductive Black Rubber Ring		Poliuretano Colore Arancio Polyuretane Orange Color	Gomma Sintetica Synthetic Rubber		Ruota Monolitica Nylon Nero Black Nylon Monolithic Wheel	
Durezza del Battistrada conforme UNI EN 12527 Tyre hardness in compliance with UNI EN 12527	Shore A									
	76	76	76	85	85	85	78		>100	>100
Temperature di Utilizzo Raccomandate Recommended working temperatures — Max=	+70°C	+70°C	+70°C	+40°C	+40°C	+40°C	+60°C		+40°C	+40°C
Min=	-30°C	-30°C	-30°C	-5 C	-5 C	-5 C	-10°C		0°C	0°C
Catteristiche del Nucleo Wheel centre characteristics	Polipropilene Nero Black Polypropylene		Nylon Nero Black Nylon	Nylon Nero Conduttivo Conductive Black Nylon		Nylon Bianco White Nylon	Polipropilene Grigio Grey Polipropylene			
Catteristiche del Mozzo Hub characteristics	Foro Liscio Plain Bearing	Tubo Parafilo Tube Threadguard	Cuscinetto a Sfera Parafilo Ball Bearing Threadguard	Foro Liscio Plain Bearing	Cuscinetto a Sfera Parafilo Ball Bearing Threadguard	Foro Liscio Plain Bearing	Foro Liscio Plain Bearing	Tubo Parafilo Tube Threadguard	Foro Liscio Plain Bearing	Tubo Parafilo Tube Threadguard

daN D — Portata Dinamica conforme UNI EN 12527 / Dynamic load capacity conform UNI EN 12527

daN FR — Resistenza al Rotolamento (FR) alla Portata Nominale / Rolling resistance (FR)at rated capacity

gr = Peso per 1 pezzo / gr = Weight for a piece

daN S — Portata Statica conforme UNI EN 12527 / Static load capacity conform UNI EN 12527

daN FO — Resistenza al Superamento Ostacolo (FO) alla Portata Nominale H ostacolo=1% ø della Ruota Min 0.5 mm / Obstacle overcoming resistance (FO) at rated capacity Obstacle H=1% of wheel, min.0.5 mm

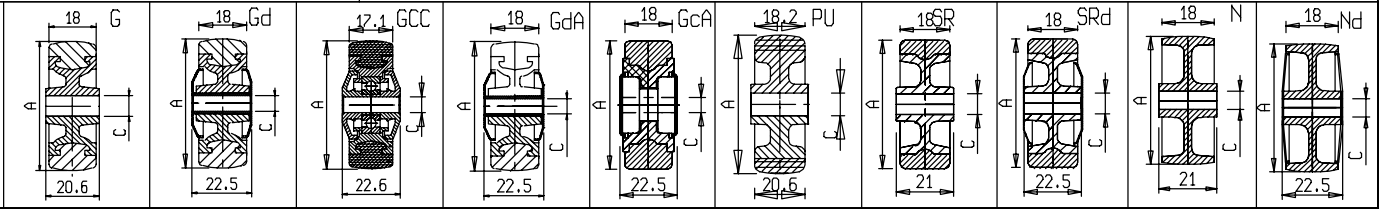

ITEM						30LPU	30LSR		30LN	
A						30	30		30	
C						6 OR 8	6 OR 8		6 OR 8	
daN D						45	30		50	
daN S						67.5	45		75	
daN FR						2.7	1.5		1.4	
daN FO						4.0	4.5		6.0	
gr						30	20		17	
ITEM						36LPU	36LSR		36LN	
A						36	36		36	
C						6 OR 8	6 OR 8		6 OR 8	
daN D						55	30		25	
daN S						82.5	45		35	
daN FR						0.6	0.6		1.0	
daN FO						3.5	3.5		5.4	
gr						14	12		12	
ITEM	40LG	40LGd				40LPU	40LSR	40LSRd	40LN	
A	40	40				40	40	40	40	
C	8	6				8	8	6	8	
daN D	40	40				60	30	30	40	
daN S	60	60				90	45	45	60	
daN FR	40	40				2.7	0.6	0.6	1.6	
daN FO	4.0	4.0				4.0	3.5	3.5	7.3	
gr	18	28				21	14	18	16	
ITEM									45LN	
A									45	
C									-	
daN D									30	
daN S									45	
daN FR									1.5	
daN FO									6.3	
gr									22	
ITEM	50LG	50LGd	50LGCC	50LGdA	50LGcA	50LPU	50LSR	50LSRd	50LN	50LNd
A	50	50	50	50	50	50	50	50	50	50
C	8	6	6	6	6/8	8	8	6	8	6
daN D	30	30	40	40	40	80	30	30	60	60
daN S	45	45	60	60	60	120	45	45	90	90
daN FR	2.7	2.7	2.7	2.7	2.7	2.7	1.5	1.5	1.4	1.4
daN FO	4.0	4.0	4.0	4.0	4.0	4.0	4.5	4.5	6.0	6.0
gr	31	41	42	45	74	30	20	32	17	33

Requisiti Ruote Serie L ø60 75, nelle varie tipologie di: Battistrada, Organi di Rotolamento
L series wheels Requirements, ø60 ø75, in the varius types off: Tyres, Rolling parts

Ruota tipo / Wheel type	G	Gd	Gc	GdA	GcA	PU	SR	SRd	N	Nd
Catteristiche del Battistrada / Tyre characteristics	Gomma Grigia Grey Rubber		Anello Gomma Grigia Grey Rubber Ring	Anello Gomma Conduttiva Nera Conductive Black Rubber Ring		Poliuretano Colore Arancio Polyuretane Orange Color	Gomma Sintetica Synthetic Rubber		Ruota Monolitica Nylon Nero Black Nylon Monolithic Wheel	
Durezza del Battistrada conforme UNI EN 12527 / Tyre hardness in compliance with UNI EN 12527	76	76	76	85	85	85 Shore A	78		>100	>100
Temperature di Utilizzo Raccomandate / Recommended working temperatures — Max=	+70°C	+70°C	+70°C	+40°C	+40°C	+40°C	+60°C		+40°C	+40°C
Temperature di Utilizzo Raccomandate / Recommended working temperatures — Min=	-30°C	-30°C	-30°C	-5 C	-5 C	-5 C	-10°C		0°C	0°C
Catteristiche del Nucleo / Wheel centre characteristics	Polipropilene Nero Black Polypropylene		Nylon Nero Black Nylon	Nylon Nero Conduttivo Conductive Black Nylon		Nylon Bianco White Nylon	Polipropilene Grigio Grey Polipropylene			
Catteristiche del Mozzo / Hub characteristics	Foro Liscio Plain Bearing	Tubo Parafilo Tube Threadguard	Cuscinetto a Sfera Parafilo Ball Bearing Threadguard	Foro Liscio Plain Bearing	Cuscinetto a Sfera Parafilo Ball Bearing Threadguard	Foro Liscio Plain Bearing	Foro Liscio Plain Bearing	Tubo Parafilo Tube Threadguard	Foro Liscio Plain Bearing	Tubo Parafilo Tube Threadguard

Portata Dinamica conforme UNI EN 12527 / Dynamic load capacity conform UNI EN 12527 — daN D

Resistenza al Rotolamento (FR) alla Portata Nominale / Rolling resistance (FR) at rated capacity — daN FR

gr = Peso per 1 pezzo / gr = Weight for a piece

Portata Statica conforme UNI EN 12527 / Static load capacity conform UNI EN 12527 — daN S

Resistenza al Superamento Ostacolo (FO) alla Portata Nominale H ostacolo=1% ø della Ruota Min 0.5 mm / Obstacle overcoming resistance (FO) at rated capacity Obstacle H=1% of wheel, min.0.5 mm — daN FO

ITEM	60LG	60LGd					60LN	60LNd
A	60	60					60	60
daN D	32	32					32	32
daN S	45	45					45	45
daN FR	2.45	2.45					1.37	1.37
daN FO	4.0	4.0					6.0	6.0
gr	60	72					25	43
ITEM	75LG	75LGd					75LN	75LNd
A	75	75					75	75
daN D	35	35					35	35
daN S	50	50					50	50
daN FR	1.4	1.4					1.0	1.0
daN FO	4.0	4.0					6.5	6.5
gr	77	85					34	56

Assali,Cuscinetto e Parafili per Ruote Serie L

Axles, Bearings and thread guards for castors of the L series

Raccomandazione Adozione Assali per le varie tipologie di Ruote
Recommendation for the adoption of axles in the different types of wheels

L/G	L/Gd-GdA	L/GCC	L/PU	L/SR	L/SRd	L/N	L/Nd
ITEM 62 291	ITEM 78 291	ITEM 78 291	ITEM 62 291	ITEM 62 291	ITEM 78 291	ITEM 55 -	ITEM 73 -
ITEM 55 -	ITEM 73 -	ITEM 73 -	ITEM 55 -	ITEM 55 -	ITEM 73 -	ITEM 62 291	ITEM 78 291
	ITEM 980 -	ITEM - -		ITEM - -	ITEM 980 -	ITEM - -	ITEM 980 -

ITEM	⚖	
62	13	ASSE VITE (624/RID)
	-	SCREW AXLE (624/RID)

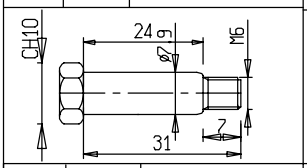

ITEM	⚖	
78	9	ASSE RID/M6x30
	-	SCREW RID/M6X30

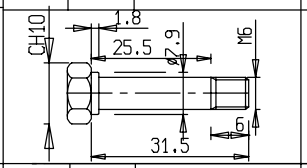

ITEM	⚖	
291	2	M6
	-	M6

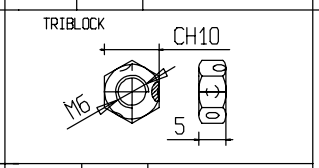

ITEM	⚖	
599	15	
	-	

ITEM	⚖	
55	11	ASSE RIB (4050/ASR)
	-	RIVETED AXLE (4050/ASR)

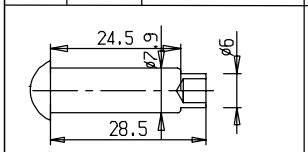

ITEM	⚖	
73	7	ASSE RIB ASS/M6x28
	-	RIVETED AXLE ASS/M6x28

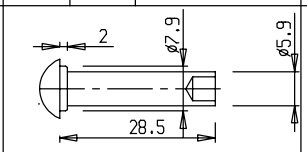

ITEM	⚖	
980	4	TUBINO 8x1x22
	-	TUBE 8x1x22

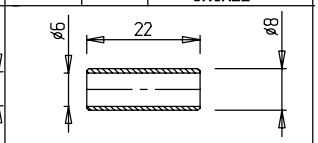

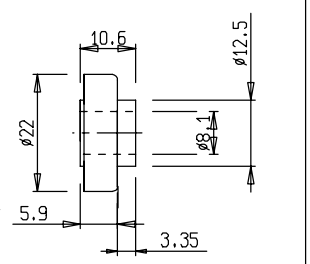

⚖ = Peso per 1 pezzo
⚖ = Weight for a piece

ITEM	⚖	
389	3	PARAFILI NYLON GRIS per RUOTE 40LGd GREY NYLON THREADGUARD for WHEELS 40LGd

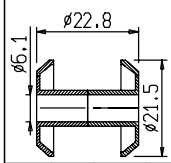

ITEM	⚖	
391	3	- PARAFILI per RUOTE 40LSRd/50LGdA THREADGUARDS for WHEELS 40LSRd/50LGdA

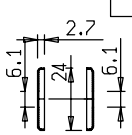

ITEM	⚖	
362	2	- PARAFILI per RUOTE 50LGd THREADGUARDS for WHEELS 50LGd

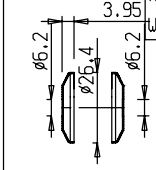

ITEM	⚖	
391 395	4	- PARAFILI per RUOTE 50LGcA THREADGUARDS for WHEELS 50LGcA

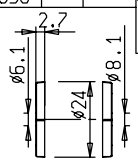

ITEM	⚖	
363	2	- PARAFILI per RUOTE 50LSRd THREADGUARDS for WHEELS 50LSRd

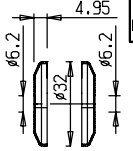

ITEM	⚖	
396	6	- PARAFILI per RUOTE 50LNd THREADGUARDS for WHEELS 50LNd

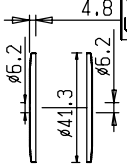

ITEM	⚖	
363	2	- PARAFILI per RUOTE 60LGd THREADGUARDS for WHEELS 60LGd

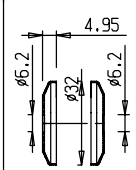

ITEM	⚖	
377	1.20	- PARAFILI NYLON GRIS per RUOTE 50LGCC GREY NYLON THREADGUARD for WHEELS 50LGCC

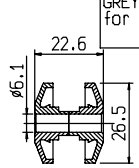

ITEM	⚖	
400	2	- PARAFILI per RUOTE 60LNd THREADGUARDS for WHEELS 60LNd

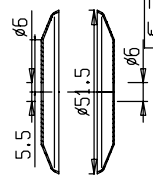

ITEM	⚖	
397	9	- PARAFILI per RUOTE 75LGd THREADGUARDS for WHEELS 75LGd

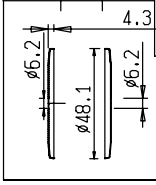

ITEM	⚖	
410	2	- PARAFILI per RUOTE 75LNd THREADGUARDS for WHEELS 75LNd

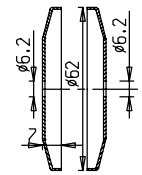

Gamma di Fissaggi Standard per Supporti Serie L LFT
Range of standard fixings for forks of the L and LFT series

A Foro Passante M6
per Vite di Fissaggio Imbus M6x20 (*)
With bolt hole of ø6 for fixing
screw imbus M6x20 (*)

A Foro Passante ø8.2
per Vite di Fissaggio Imbus M8x20 (*)
With bolt hole of ø8.2 for fixing
screw imbus M8x20 (*)

A Foro Passante ø10.2
per Vite di Fissaggio Imbus M10x20 (*)
With bolt hole of ø10.2 for fixing
screw imbus M10x20 (*)

A Perno Filettato Rivettato
Dimensioni a Tabella da Specificare
sempre all'ordine.
With riveted thread stem, dimensions as
per table to be specified when placing
order.

B6

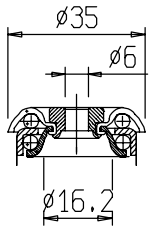

* Lunghezza della Vite Inseribile
con Ruota Assemblata
Length of screw that can be inserted
with assembled wheel

B8

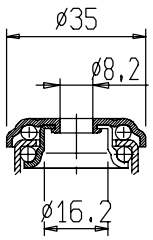

* Lunghezza della Vite Inseribile
con Ruota Assemblata
Length of screw that can be inserted
with assembled wheel

B10

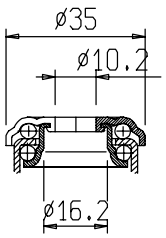

* Lunghezza della Vite Inseribile
con Ruota Assemblata
Length of screw that can be inserted
with assembled wheel

F

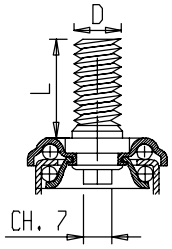

D	M10	M8
L	15-20-30	15

Fissaggio a Piastra Integrale P4 42x42
Integral Plate fixing P4 42x42

P4

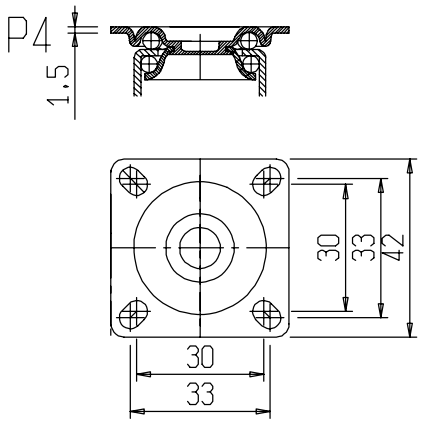

Fissaggio a Piastra Integrale P8 47x47
Integral Plate fixing P8 47x47

P8

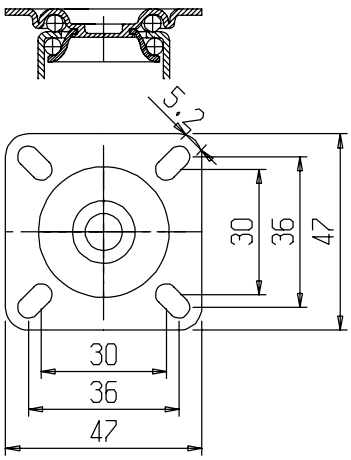

Fissaggio a Piastra Integrale P5 55x55
Integral Plate fixing P5 55x55

P5

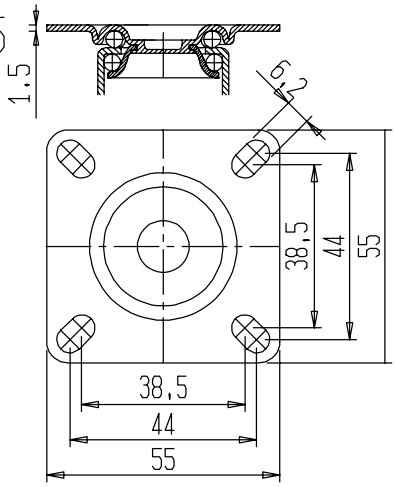

Fissaggio ad Espansore in Gomma per Tubo Tondo
le Dimensioni del Gommino Disponibili vedi
Tabella.
Rubber expander fixing for round tube, available
rubber fastener dimensions per table.

E

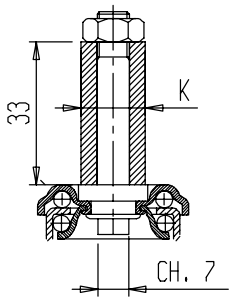

K	16	17	18	19	22	25

K=Diametro Interno del Tubo
da Specificare sempre all Ordine.
K= Inside diameter of tube, always to be
specified when placing order.

Supporti girevoli Serie L per i vari Diametri di Ruote e Gamma di Fissaggi
Swivel forks of the L series for the various wheels diameters and rage of fixings

Materiale: Lamiera ferro secondo standard EN 10130
Trattamanto superficiale: Zincatura passivata UNI ISO 2081
Corona sfere superiore: n. 18 sfere 5/32" ingrassate
Corona sfere inferiore: n. 18 sfere 5/32" ingrassate
Material: Iron sheet subject to UNI ISO 2081
Surface treatment:passivated galvanisation subject to UNI ISO 2081
Upper ball crown N. 18 greased balls 5/32
Lower ball crown N.18 greased balls 5/32

daN S Portata Statica conforme UNI EN 12527 *
daN S Static load capacity conform UNI EN 12527 *

gr=Peso per 1 pezzo
gr=Weight for a piece

	B6	B8	B10	F	P4	P8	P5	E
		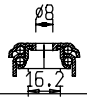	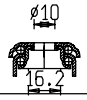	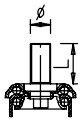	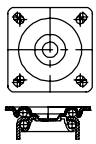	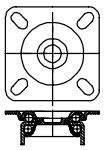	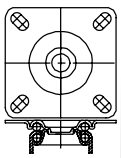	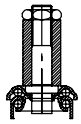
ITEM	30H29/L/B6	30H29/L/B8	30H29/L/B10	30H29/L/F	30H29/L/P4	30H29/L/P8	30H29/L/P5	30H29/L/E
H	29	29	29	29	29	29	29	29
B	14.5	14.5	14.5	14.5	14.5	14.5	14.5	14.5
daN S	42	42	42	42	42	42	42	42
gr	52	52	52	75	63	74	76	103
ITEM	30-36/L/B6	30-36/L/B8	30-36/L/B10	30-36/L/F	30-36/L/P4	30-36/L/P8	30-36/L/P5	30-36/L/E
H	32.5	32.5	32.5	32.5	32.5	32.5	32.5	32.5
B	14.5	14.5	14.5	14.5	14.5	14.5	14.5	14.5
daN S	42	42	42	42	42	42	42	42
gr	52	52	52	75	63	74	76	103
ITEM	40/L/B8	40/L/B8	40/L/B10	40/L/F	40/L/P4	40/L/P8	40/L/P5	40/L/E
H	39	39	39	39	39	39	39	39
B	24.5	24.5	24.5	24.5	24.5	24.5	24.5	24.5
daN S	38	38	38	38	38	38	38	38
gr	62	62	62	84	73	84	86	112
ITEM	50/L/B6	50/L/B8	50/L/B10	50/L/F	50/L/P4	50/L/P8	50/L/P5	50/L/E
H	41.5	41.5	41.5	41.5	41.5	41.5	41.5	41.5
B	20.5	20.5	20.5	20.5	20.5	20.5	20.5	20.5
daN S	45	45	45	45	45	45	45	45
gr	62	62	62	84	73	84	86	112
ITEM	60/L/B6	60/L/B8	60/L/B10	60/L/F	60/L/P4	60/L/P8	60/L/P5	60/L/E
H	49	49	49	49	49	49	49	49
B	23.5	23.5	23.5	23.5	23.5	23.5	23.5	23.5
daN S	45	45	45	45	45	45	45	45
gr	73	73	73	95	84	95	97	123
ITEM	75/L/B6	75/L/B8	75/L/B10	75/L/F	75/L/P4	75/L/P8	75/L/P5	75/L/E
H	63.5	63.5	63.5	63.5	63.5	63.5	63.5	63.5
B	28	28	28	28	28	28	28	28
daN S	50	50	50	50	50	50	50	50
gr	85	85	85	108	96	107	109	135

ø30

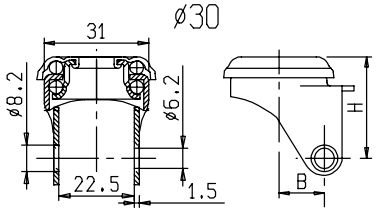

ø30-36

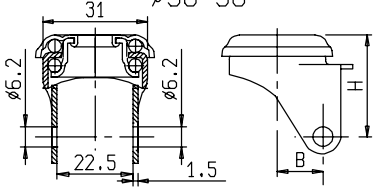

ø 40 50 60 75

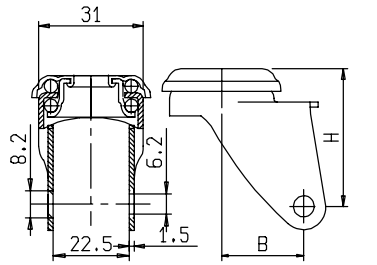

Supporti Girevoli dotati di Freno Totale LFT per i vari Diametri di Ruote e Gamma di Fissaggi
Swivel forks with total brake LFT for the various wheel diameters and range of fixings

Materiale: Lamiera ferro secondo standard EN 10130
Trattamanto superficiale: Zincatura passivata UNI ISO 2081
Corona sfere superiore: n. 18 sfere 5/32" ingrassate
Corona sfere inferiore: n. 18 sfere 5/32" ingrassate
Material: Iron sheet subject to UNI ISO 2081
Surface treatment passivated galvanisation subject to UNI ISO 2081
Upper ball crown N. 18 greased balls 5/32
Lower ball crown N.18 greased balls 5/32

daN S Portata Statica conforme UNI EN 12527 *
daN S Static load capacity conform UNI EN 12527 *

gr=Peso per 1 pezzo
gr=Weight for a piece

	B6	B8	B10	F	P4	P8	P5	E
	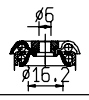	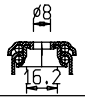	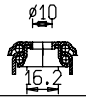	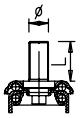	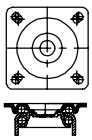	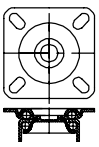	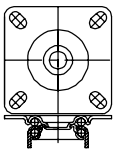	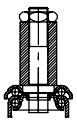
ITEM	40/LFT/B6	40/LFT/B8	40/LFT/B10	40/LFT/F	40/LFT/P4	40/LFT/P8	40/LFT/P5	40/LFT/E
H	39	39	39	39	39	39	39	39
F	78	78	78	78	78	78	78	78
daN S	39	39	39	39	39	39	39	39
gr	88	88	88	110	99	110	112	138
ITEM	50/LFT/B6	50/LFT/B8	50/LFT/B10	50/LFT/F	50/LFT/P4	50/LFT/P8	50/LFT/P5	50/LFT/E
H	41.5	41.5	41.5	41.5	41.5	41.5	41.5	41.5
F	78	78	78	78	78	78	78	78
daN S	45	45	45	45	45	45	45	45
gr	88	88	88	110	99	110	112	138
ITEM	60/LFT/B6	60/LFT/B8	60/LFT/B10	60/LFT/F	60/LFT/P4	60/LFT/P8	60/LFT/P5	60/LFT/E
H	49	49	49	49	49	49	49	49
F	78.5	78.5	78.5	78.5	78.5	78.5	78.5	78.5
daN S	45	45	45	45	45	45	45	45
gr	103	103	103	125	114	125	127	153
ITEM	75/LFT/B6	75/LFT/B8	75/LFT/B10	75/LFT/F	75/LFT/P4	75/LFT/P8	75/LFT/P5	75/LFT/E
H	63.5	63.5	63.5	63.5	63.5	63.5	63.5	63.5
F	78	78	78	78	78	78	78	78
daN S	50	50	50	50	50	50	50	50
gr	112	112	112	134	123	134	136	162

ø40 50 60 75

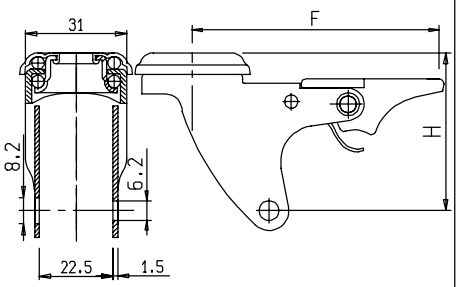

Complessivi girevoli Serie 30-36/L nelle varie tipologie di:Fissaggi,Ruote assemblate.
Swivel castors of the 30-36/L series with different types of fixings, assembled wheels

Requisiti dei Complessivi assemblati alle varie Ruote Requirements of the castors assembled with the different wheels		PU	SR	N
Portata Dinamica conforme UNI EN 12527 Dynamic load capacity conform UNI EN 12527	D	35	20	35
Portata Statica conforme UNI EN 12527 Static load capacity conform UNI EN 12527	S	52	30	52

= Peso per 1 pezzo
=Weight for a piece

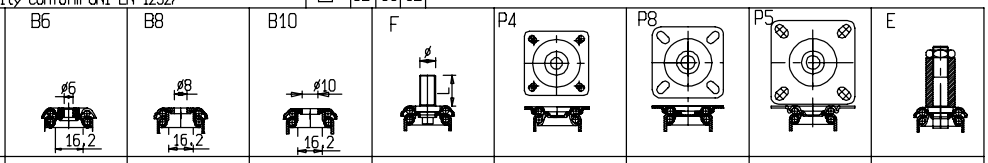

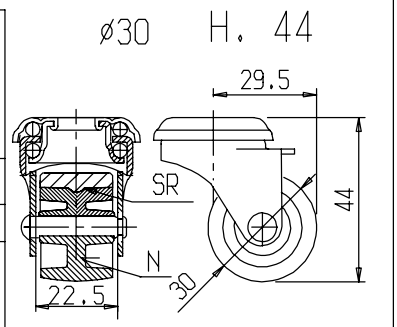

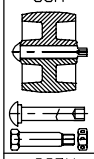

30N	B6	B8	B10	F	P4	P8	P5	E
ITEM	30/L/H44NB6	30/L/H44NB8	30/L/H44NB10	30/L/H44NF	30/L/H44NP4	30/L/H44NP8	30/L/H44NP5	30/L/H44NE
gr	66	66	66	88	77	88	90	117

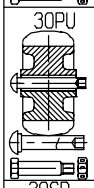

30PU								
ITEM	30/L/H44PUB6	30/L/H44PUB8	30/L/H44PUB10	30/L/H44PUF	30/L/H44PUP4	30/L/H44PUP8	30/L/H44PUP5	30/L/H44PUE
gr	-	-		-	-	-	-	-

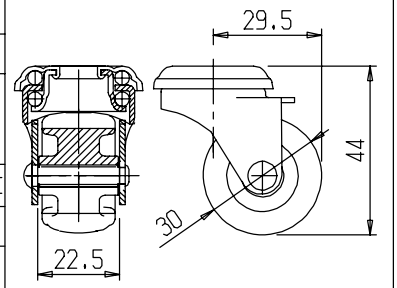

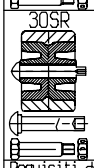

30SR								
ITEM	30/L/H44SRB6	30/L/H44SRB6	30/L/H44SRB10	30/L/H44SRF	30/L/H44SRP4	30/L/H44SRP8	30/L/H44SRP5	30/L/H44SRE
gr	64	64	64	86	75	86	88	115

Requisiti dei Complessivi assemblati alle varie Ruote Requirements of the castors assembled with the different wheels		PU	SR	N
Portata Dinamica conforme UNI EN 12527 Dynamic load capacity conform UNI EN 12527	D	35	15	20
Portata Statica conforme UNI EN 12527 Static load capacity conform UNI EN 12527	S	52	22	30

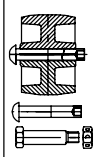

30N								
ITEM	30/L/NB6	30/L/NB8	30/L/NB10	30/L/NF	30/L/NP4	30/L/NP8	30/L/NP5	30/L/NE
gr	71	71	71	93	82	93	95	122

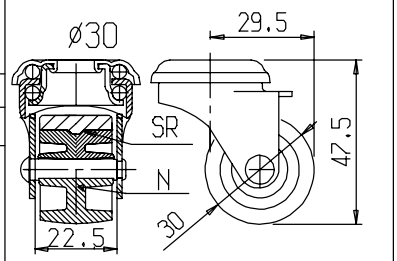

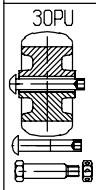

30PU								
ITEM	30/L/PUB6	30/L/PUB8	30/L/PUB10	30/L/PUF	30/L/PUP4	30/L/PUP8	30/L/PUP5	30/L/PUE
gr	-		-	-	-	-	-	-

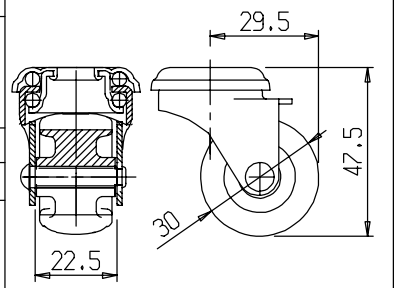

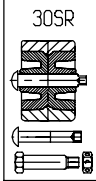

30SR								
ITEM	30/L/SRB6	30/L/SRB8	30/L/SRB10	30/L/SRF	30/L/SRP4	30/L/SRP8	30/L/SRP5	30/L/SRE
gr	69	69	69	91	80	91	93	120

Requisiti dei Complessivi assemblati alle varie Ruote Requirements of the castors assembled with the different wheels		PU	SR	N
Portata Dinamica conforme UNI EN 12527 Dynamic load capacity conform UNI EN 12527	D	40	20	22
Portata Statica conforme UNI EN 12527 Static load capacity conform UNI EN 12527	S	60	30	33

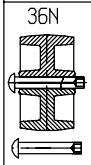

36N								
ITEM	36/L/NB6	36/L/NB8	36/L/NB10	36/L/NF	36/L/NP4	36/L/NP8	36/L/NP5	36/L/NE
gr	71	71	71	93	82	93	95	122

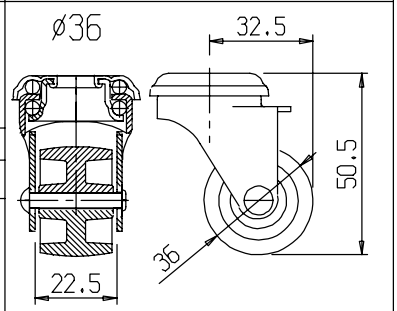

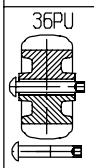

36PU								
ITEM	36/L/PUB6	36/L/PUB8	36/L/PUB10	36/L/PUF	36/L/PUP4	36/L/PUP8	36/L/PUP5	36/L/PUE
gr	-	-	-	-	-	-	-	-

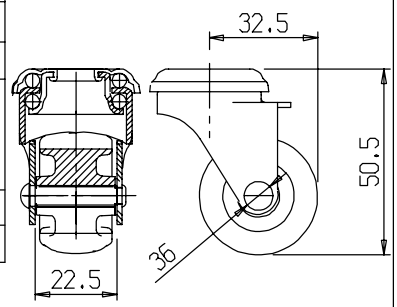

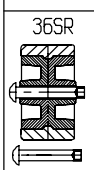

36SR								
ITEM	36/L/SRB6	36/L/SRB8	36/L/SRB10	36/L/SRF	36/L/SRP4	36/L/SRP8	36/L/SRP5	36/L/SRE
gr	71	71	71	93	82	93	95	122

Complessivi girevoli Serie 40/L nelle varie tipologie di:Fissaggi,Ruote assemblate.
Swivel castors of the 40/L series wit different types of fixings, assembled wheels

Requisiti dei Complessivi assemblati alle varie Ruote Requirements of the castors assembled with the different wheels		G	Gd	PU	SR	SRd	N
Portata Dinamica conforme UNI EN 12527 Dynamic load capacity conform UNI EN 12527	daN D	40	40	60	30	30	30
Portata Statica conforme UNI EN 12527 Static load capacity conform UNI EN 12527	daN S	60	60	90	45	45	45

gr = Peso per 1 pezzo
gr = Weight for a piece

	B6	B8	B10	F	P4	P8	P5	E
	ø6, 16.2	ø8, 16.2	ø10, 16.2	ø, L				

	ITEM	40/L/GB6	40/L/GB8	40/L/GB10	40/L/GF	40/L/GP4	40/L/GP8	40/L/GP5	40/L/GE
40G	gr	106	106	106	128	117	128	130	156
40Gd	ITEM	40/L/GdB6	40/L/GdB8	40/L/GdB10	40/L/GdF	40/L/GdP4	40/L/GdP8	40/L/GdP5	40/L/GdE
	gr	111	111	111	133	122	133	135	161
40PU	ITEM	40/L/PUB6	40/L/PUB8	40/L/PUB10	40/L/PUF	40/L/PUP4	40/L/PUP8	40/L/PUP5	40/L/PUE
	gr	109	109	109	131	120	131	133	159
40SR	ITEM	40/L/SRB6	40/L/SRB8	40/L/SRB10	40/L/SRF	40/L/SRP4	40/L/SRP8	40/L/SRP5	40/L/SRE
	gr	102	102	102	124	113	124	126	152
40SRd	ITEM	40/L/SRdB6	40/L/SRdB8	40/L/SRdB10	40/L/SRdF	40/L/SRdP4	40/L/SRdP8	40/L/SRdP5	40/L/SRdE
	gr	105	105	105	127	116	127	129	155
40N	ITEM	40/L/NB6	40/L/NB8	40/L/NB10	40/L/NF	40/L/NP4	40/L/NP8	40/L/NP5	40/L/NE
	gr	89	89	89	110	99	110	112	139

ø40

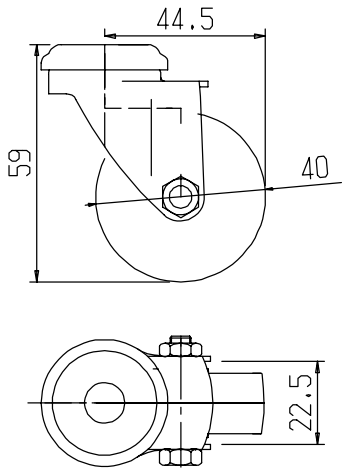

Complessivi girevoli Serie 50/L nelle varie tipologie di:Fissaggi,Ruote assemblate.
Swivel castors of the 50/L series with different types of fixings, assembled wheels

Requisiti dei Complessivi assemblati alle varie Ruote Requirements of the castors assembled with the different wheels		N
Portata Dinamica conforme UNI EN 12527 Dynamic load capacity conform UNI EN 12527	daN D	30
Portata Statica conforme UNI EN 12527 Static load capacity conform UNI EN 12527	daN S	45

gr = Peso per 1 pezzo
gr = Weight for a piece

	B6	B8	B10	F	P4	P8	P5	E
	ø8, 16.2	ø8, 16.2	ø10, 16.2	ø, L				

	ITEM	45/L/NB6	45/L/NB8	45/L/NB10	45/L/NF	45/L/NP4	45/L/NP8	45/L/NP5	45/L/NE
40N	gr	91	91	91	113	102	113	115	142

ø45

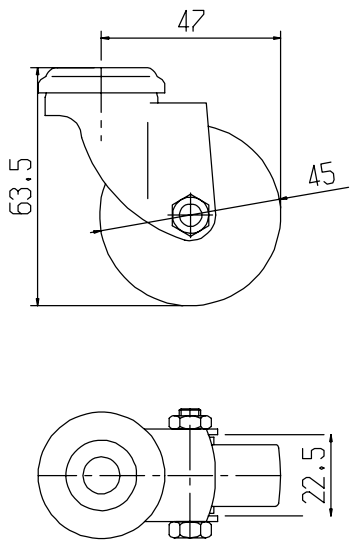

Complessivi girevoli Serie 50/L nelle varie tipologie di:Fissaggi,Ruote assemblate.
Swivel castors of the 50/L series with different types of fixings, assembled wheels

Requisiti dei Complessivi assemblati alle varie Ruote Requirements of the castors assembled with the different wheels		G	Gd	GCC	GdA	GcA	PU	SR	SRd	N	Nd
Portata Dinamica conforme UNI EN 12527 Dynamic load capacity conform UNI EN 12527	daN D	40	40	40	30	30	60	40	40	30	30
Portata Statica conforme UNI EN 12527 Static load capacity conform UNI EN 12527	daN S	60	60	60	45	45	90	60	60	45	45

gr = Peso per 1 pezzo
gr = Weight for a piece

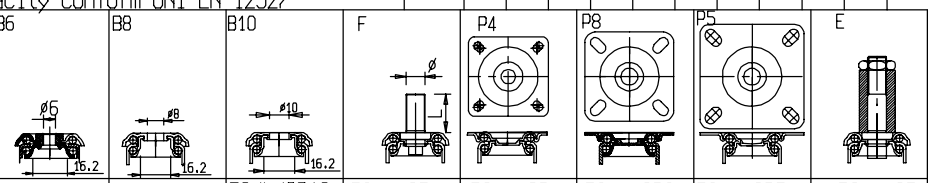

	ITEM	B6	B8	B10	F	P4	P8	P5	E
50G	gr	50/L/GB6	50/L/GB8	50/L/GB10	50/L/GF	50/L/GP4	50/L/GP8	50/L/GP5	50/L/GE
		109	109	109	131	120	131	133	159
50Gd	gr	50/L/GdB6	50/L/GdB8	50/L/GdB10	50/L/GdF	50/L/GdP4	50/L/GdP8	50/L/GdP5	50/L/GdE
		114	114	114	136	125	136	138	165
50GCC	gr	50/L/GCCB6	50/L/GCCB8	50/L/GCCB10	50/L/GCCF	50/L/GCCP4	50/L/GCCP8	50/L/GCCP5	50/L/GCCE
		119	119	119	141	130	141	143	170
50GdA	gr	50/L/GdAB6	50/L/GdAB8	50/L/GdAB10	50/L/GdAF	50/L/GdAP4	50/L/GdAP8	50/L/GdAP5	50/L/GdAE
		117	117	117	139	128	139	141	168
50GcA	gr	50/L/GcAB6	50/L/GcAB8	50/L/GcAB10	50/L/GcAF	50/L/GcAP4	50/L/GcAP8	50/L/GcAP5	50/L/GcAE
		156	156	156	178	167	178	202	229
50PU	gr	50/L/PUB6	50/L/PUB8	50/L/PUB10	50/L/PUF	50/L/PUP4	50/L/PUP8	50/L/PUP5	50/L/PUE
		121	121	121	143	132	143	167	194
50SR	gr	50/L/SRB6	50/L/SRB8	50/L/SRB10	50/L/SRF	50/L/SRP4	50/L/SRP8	50/L/SRP5	50/L/SRE
		98	98	98	118	109	120	122	147
50SRd	gr	50/L/SRdB6	50/L/SRdB8	50/L/SRdB10	50/L/SRdF	50/L/SRdP4	50/L/SRdP8	50/L/SRdP5	50/L/SRdE
		105	105	105	150	139	150	174	201
50N	gr	50/L/NB6	50/L/NB8	50/L/NB10	50/L/NF	50/L/NP4	50/L/NP8	50/L/NP5	50/L/NE
		91	91	91	113	102	113	115	142
50Nd	gr	50/L/NdB6	50/L/NdB8	50/L/NdB10	50/L/NdF	50/L/NdP4	50/L/NdP8	50/L/NdP5	50/L/NdE
		106	106	106	128	117	128	130	157

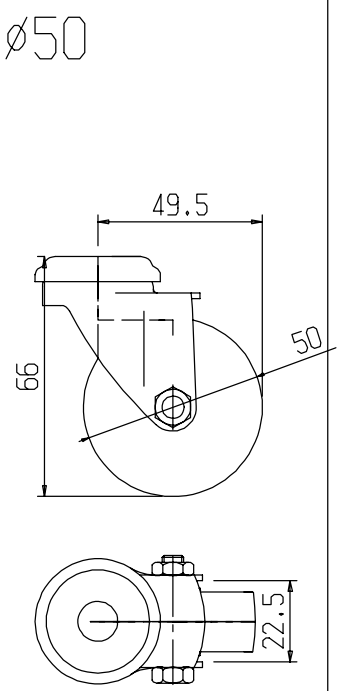

Complessivi girevoli Serie 60/L nelle varie tipologie di:Fissaggi,Ruote assemblate.

Swivel castors of the 60/L series with different types of fixings, assembled wheels.

Requisiti dei Complessivi assemblati alle varie Ruote Requirements of the castors assembled with the different wheels		G	Gd	N	Nd
Portata Dinamica conforme UNI EN 12527 Dynamic load capacity conform UNI EN 12527	daN D	45	45	20	20
Portata Statica conforme UNI EN 12527 Static load capacity conform UNI EN 12527	daN S	67	67	30	30

gr = Peso per 1 pezzo

gr = Weight for a piece

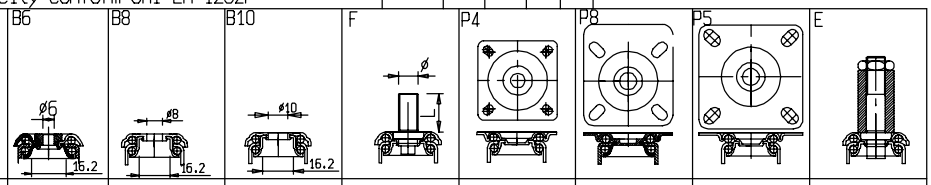

	ITEM	60/L/GB6	60/L/GB8	60/L/GB10	60/L/GF	60/L/GP4	60/L/GP8	60/L/GP5	60/L/GE
60G 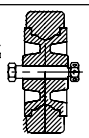	gr	160	160	160	182	171	182	184	208

	ITEM	60/L/GdB6	60/L/GdB8	60/L/GdB10	60/L/GdF	60/L/GdP4	60/L/GdP8	60/L/GdP5	60/L/GdE
60Gd 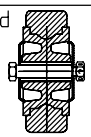	gr	182	182	182	194	183	194	196	220

ITEM	60/L/G-Gd	ITEM	60/L/G-Gd
	con Asse Rivettato With riveted axle		Nucleo Grigio Grey Centre

	ITEM	60/L/NB6	60/L/NB8	60/L/NB10	60/L/NF	60/L/NP4	60/L/NP8	60/L/NP5	60/L/NE
60N 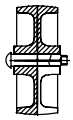	gr	110	110	110	132	121	132	134	160

	ITEM	60/L/NdB6	60/L/NdB8	60/L/NdB10	60/L/NdF	60/L/NdP4	60/L/NdP8	60/L/NdP5	60/L/NdE
60Nd 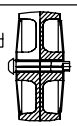	gr	132	132	132	154	143	154	156	182

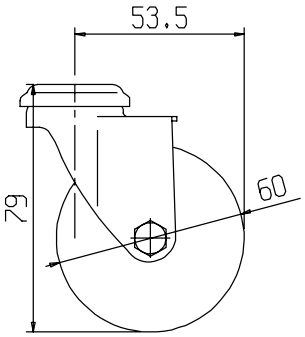

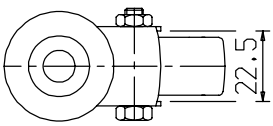

Complessivi girevoli Serie 75/L nelle varie tipologie di:Fissaggi,Ruote assemblate.

Swivel castors of the 75/L series with different types of fixings, assembled wheels.

Requisiti dei Complessivi assemblati alle varie Ruote Requirements of the castors assembled with the different wheels		G	Gd	N	Nd
Portata Dinamica conforme UNI EN 12527 Dynamic load capacity conform UNI EN 12527	daN D	36	36	20	20
Portata Statica conforme UNI EN 12527 Static load capacity conform UNI EN 12527	daN S	54	54	30	30

gr = Peso per 1 pezzo

gr = Weight for a piece

	B6	B8	B10	F	P4	P8	P5	E
	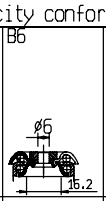	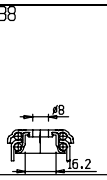	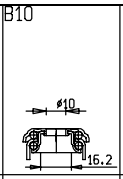	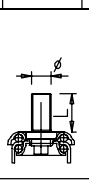	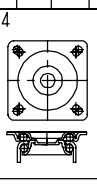	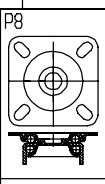	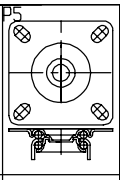	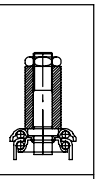

75 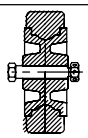	ITEM	75/L/GB6	75/L/GB8	75/L/GB10	75/L/GF	75/L/GP4	75/L/GP8	75/L/GP5	75/L/GE
	gr	178	178	178	200	189	200	202	228
75Gd 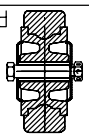	ITEM	75/L/GdB6	75/L/GdB8	75/L/GdB10	75/L/GdF	75/L/GdP4	75/L/GdP8	75/L/GdP5	75/L/GdE
	gr	197	197	197	219	208	219	227	247

ITEM	75/L/G-Gd	ITEM	75/L/G-Gd
	con Asse Rivettato With riveted axle		Nucleo Grigio Grey Centre

75N 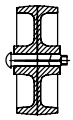	ITEM	75/L/NB6	75/L/NB8	75/L/NB10	75/L/NF	75/L/NP4	75/L/NP8	75/L/NP5	75/L/NE
	gr	131	131	131	153	142	153	155	181
75Nd 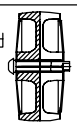	ITEM	75/L/NdB6	75/L/NdB8	75/L/NdB10	75/L/NdF	75/L/NdP4	75/L/NdP8	75/L/NdP5	75/L/NdE
	gr	132	132	132	154	143	154	156	182

ø75

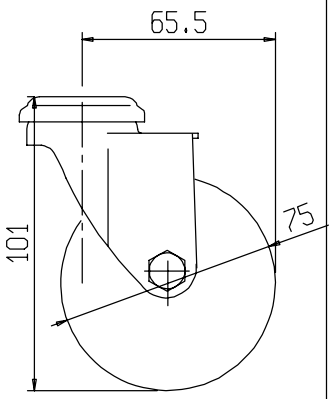

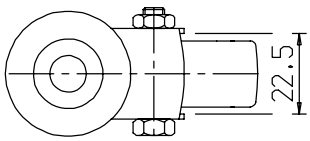

Complessivi girevoli Serie 40LFT nelle varie tipologie di:Fissaggi,Ruote assemblate.

Swivel castors of the 40/LFT series with different types of fixings, assembled wheels

Requisiti dei Complessivi assemblati alle varie Ruote Requirements of the castors assembled with the different wheels		G	Gd	PU	SR	SRd	N
Portata Dinamica conforme UNI EN 12527 Dynamic load capacity conform UNI EN 12527	daN D	40	40	36	30	30	30
Portata Statica conforme UNI EN 12527 Static load capacity conform UNI EN 12527	daN S	60	60	54	45	45	45
Resistenza Passiva del Dispositivo Frenante Conforme UNI EN 12527 Passive resistance of braking devicein compliance with UNI EN 12527	daN FT	11	11	11	7	7	6

gr = Peso per 1 pezzo

gr = Weight for a piece

	B6	B8	B10	F	P4	P8	P5	E
	ø6 / 16,2	ø8 / 16,2	ø10 / 16,2	ø / L				

	ITEM	40/LFT/GB6	40/LFT/GB8	40/LFT/GB10	40/LFT/GF	40/LFT/GP4	40/LFT/GP8	40/LFT/GP5	40/LFT/GE
40G	gr	134	134	134	156	145	156	158	184
40Gd	ITEM	40/LFT/GdB6	40/LFT/GdB8	40/LFT/GdB10	40/LFT/GdF	40/LFT/GdP4	40/LFT/GdP8	40/LFT/GdP5	40/LFT/GdE
	gr	139	139	139	161	150	161	163	189
40PU	ITEM	40/LFT/PUB6	40/LFT/PUB8	40/LFT/PUB10	40/LFT/PUF	40/LFT/PUP4	40/LFT/PUP8	40/LFT/PUP5	40/LFT/PUE
	gr	137	137	137	159	148	159	161	187
40SR	ITEM	40/LFT/SRB6	40/LFT/SRB8	40/LFT/SRB10	40/LFT/SRF	40/LFT/SRP4	40/LFT/SRP8	40/LFT/SRP5	40/LFT/SRE
	gr	130	130	130	152	141	152	154	180
40SRd	ITEM	40/LFT/SRdB6	40/LFT/SRdB8	40/LFT/SRdB10	40/LFT/SRdF	40/LFT/SRdP4	40/LFT/SRdP8	40/LFT/SRdP5	40/LFT/SRdE
	gr	133	133	133	155	144	155	157	183
40N	ITEM	40/LFT/NB6	40/LFT/NB8	40/LFT/NB10	40/LFT/NF	40/LFT/NP4	40/LFT/NP8	40/LFT/NP5	40/LFT/NE
	gr	117	117	117	138	127	138	140	167

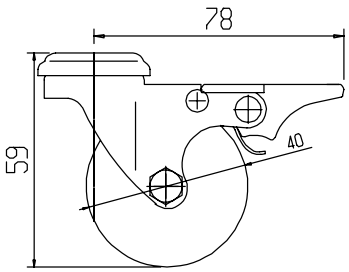

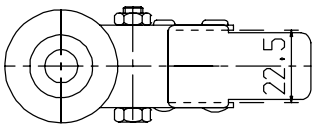

Complessivi girevoli Serie 50LFT nelle varie tipologie di:Fissaggi,Ruote assemblate.
Swivel castors of the 50/LFT series with different types of fixings, assembled wheels

Requisiti dei Complessivi assemblati alle varie Ruote Requirements of the castors assembled with the different wheels		G	Gd	GCC	GdA	GcA	PU	SR	SRd	N	Nd
Portata Dinamica conforme UNI EN 12527 Dynamic load capacity conform UNI EN 12527	daN D	40	40	40	30	30	60	40	40	20	20
Portata Statica conforme UNI EN 12527 Static load capacity conform UNI EN 12527	daN S	60	60	60	45	45	90	60	60	30	30
Resistenza Passiva del Dispositivo Frenante Conforme UNI EN 12527 Passive resistance of braking devicein compliance with UNI EN 12527	daN FT	11	11	11	11	11	11	7	7	6	6

gr = Peso per 1 pezzo
gr = Weight for a piece

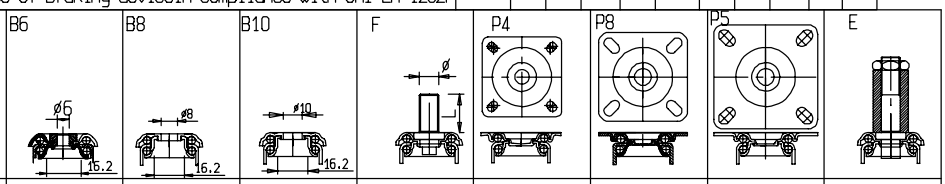

	ITEM	B6	B8	B10	F	P4	P8	P5	E
50G		50/LFT/GB6	50/LFT/GB8	50/LFT/GB10	50/LFT/GF	50/LFT/GP4	50/LFT/GP8	50/LFT/GP5	50/LFT/GE
	gr	134	134	134	156	145	156	158	184
50Gd		50/LFT/GdB6	50/LFT/GdB8	50/LFT/GdB10	50/LFT/GdF	50/LFT/GdP4	50/LFT/GdP8	50/LFT/GdP5	50/LFT/GdE
	gr	139	139	139	161	150	161	163	190
50GCC		50/LFT/GCCB6	50/LFT/GCCB8	50/LFT/GCCB10	50/LFT/GCCF	50/LFT/GCCP4	50/LFT/GCCP8	50/LFT/GCCP5	50/LFT/GCCE
	gr	144	144	144	166	155	166	168	195
50GdA		50/LFT/GdAB6	50/LFT/GdAB8	50/LFT/GdAB10	50/LFT/GdAF	50/LFT/GdAP4	50/LFT/GdAP8	50/LFT/GdAP5	50/LFT/GdAE
	gr	142	142	142	164	153	164	166	193
50GcA		50/LFT/GcAB6	50/LFT/GcAB8	50/LFT/GcAB10	50/LFT/GcAF	50/LFT/GcAP4	50/LFT/GcAP8	50/LFT/GcAP5	50/LFT/GcAE
	gr	181	181	181	203	192	203	227	254
50PU		50/LFT/PUB6	50/LFT/PUB8	50/LFT/PUB10	50/LFT/PUF	50/LFT/PUP4	50/LFT/PUP8	50/LFT/PUP5	50/LFT/PUE
	gr	146	146	146	168	157	168	192	219
50SR		50/LFT/SRB6	50/LFT/SRB8	50/LFT/SRB10	50/LFT/SRF	50/LFT/SRP4	50/LFT/SRP8	50/LFT/SRP5	50/LFT/SRE
	gr	123	123	123	143	134	145	147	172
50SRd		50/LFT/SRdB6	50/LFT/SRdB8	50/LFT/SRdB10	50/LFT/SRdF	50/LFT/SRdP4	50/LFT/SRdP8	50/LFT/SRdP5	50/LFT/SRdE
	gr	130	130	130	175	164	175	199	226
50N		50/LFT/NB6	50/LFT/NB8	50/LFT/NB10	50/LFT/NF	50/LFT/NP4	50/LFT/NP8	50/LFT/NP5	50/LFT/NE
	gr	116	116	116	138	127	138	140	167
50Nd		50/LFT/NdB6	50/LFT/NdB8	50/LFT/NdB10	50/LFT/NdF	50/LFT/NdP4	50/LFT/NdP8	50/LFT/NdP5	50/LFT/NdE
	gr	131	131	131	153	142	153	155	182

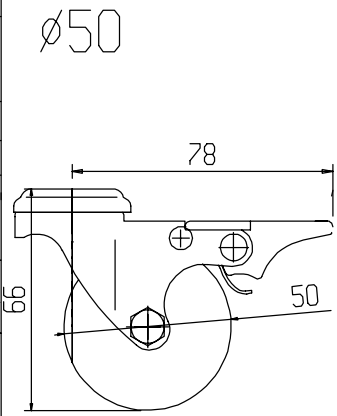

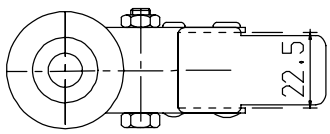

Complessivi girevoli Serie 60-75LFTnelle varie tipologie di:Fissaggi,Ruote assemblate.
Swivel castors of the 60-75/LFT series with different types of fixings, assembled wheels.

Requisiti dei Complessivi assemblati alle varie Ruote Requirements of the castors assembled with the different wheels		G	Gd	N	Nd
Portata Dinamica conforme UNI EN 12527 Dynamic load capacity conform UNI EN 12527	daN D	36	36	20	20
Portata Statica conforme UNI EN 12527 Static load capacity conform UNI EN 12527	daN S	54	54	30	30
Resistenza Passiva del Dispositivo Frenante Conforme UNI EN 12527 Passive resistance of braking devicein compliance with UNI EN 12527	daN FT	7.2	7.2	6	6

gr = Peso per 1 pezzo
gr = Weight for a piece

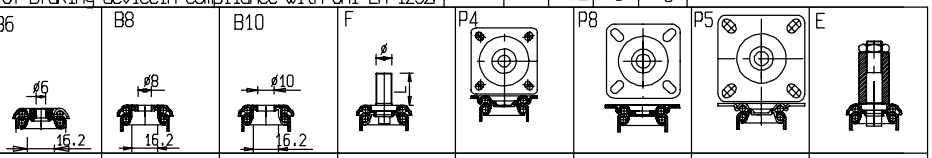

	ITEM	B6	B8	B10	F	P4	P8	P5	E
60G	ITEM	60/LFT/GB6	60/LFT/GB8	60/LFT/GB10	60/LFT/GF	60/LFT/GP4	60/LFT/GP8	60/LFT/GP5	60/LFT/GE
	gr	179	179	179	201	190	201	203	229
60Gd	ITEM	60/LFT/GdB6	60/LFT/GdB8	60/LFT/GdB10	60/LFT/GdF	60/LFT/GdP4	60/LFT/GdP8	60/LFT/GdP5	60/LFT/GdE
	gr	186	186	186	208	197	208	210	236
60N	ITEM	60/LFT/NB6	60/LFT/NB8	60/LFT/NB10	60/LFT/NF	60/LFT/NP4	60/LFT/NP8	60/LFT/NP5	60/LFT/NE
	gr	129	129	129	151	140	151	153	179
60Nd	ITEM	60/LFT/NdB6	60/LFT/NdB8	60/LFT/NdB10	60/LFT/NdF	60/LFT/NdP4	60/LFT/NdP8	60/LFT/NdP5	60/LFT/NdE
	gr	151	151	151	173	162	173	175	201

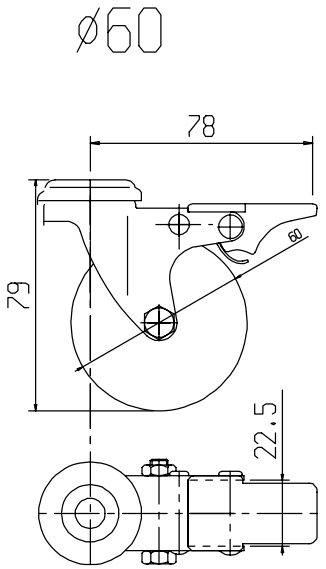

Requisiti dei Complessivi assemblati alle varie Ruote Requirements of the castors assembled with the different wheels		G	Gd	N	Nd
Portata Dinamica conforme UNI EN 12527 Dynamic load capacity conform UNI EN 12527	daN D	36	36	20	20
Portata Statica conforme UNI EN 12527 Static load capacity conform UNI EN 12527	daN S	54	54	30	30
Resistenza Passiva del Dispositivo Frenante Conforme UNI EN 12527 Passive resistance of braking devicein compliance with UNI EN 12527	daN FT	7.5	7.5	4.3	4.3

	ITEM	75/LFT/GB6	75/LFT/GB8	75/LFT/GB10	75/LFT/GF	75/LFT/GP4	75/LFT/GP8	75/LFT/GP5	75/LFT/GE
75G	gr	204	204	204	226	215	226	228	254
75Gd	ITEM	75/LFT/GdB6	75/LFT/GdB8	75/LFT/GdB10	75/LFT/GdF	75/LFT/GdP4	75/LFT/GdP8	75/LFT/GdP5	75/LFT/GdE
	gr	223	223	223	245	234	245	247	273
75N	ITEM	75/LFT/NB6	75/LFT/NB8	75/LFT/NB10	75/LFT/NF	75/LFT/NP4	75/LFT/NP8	75/LFT/NP5	75/LFT/NE
	gr	157	157	157	180	168	179	181	207
75Nd	ITEM	75/LFT/NdB6	75/LFT/NdB8	75/LFT/NdB10	75/LFT/NdF	75/LFT/NdP4	75/LFT/NdP8	75/LFT/NdP5	75/LFT/NdE
	gr	184	184	184	207	195	206	208	234

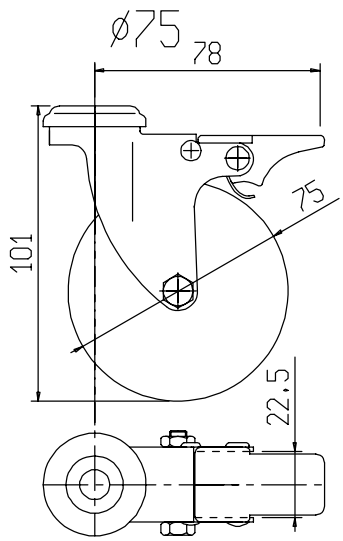

Supporti fissi Serie L per i vari Diametri di Ruote e Gamma di Fissaggi
Fixed forks of the L series for the various wheels diameters and fixings range

Materiale: Lamiera ferro secondo standard EN 10130
Trattamanto superficiale:Zincatura passivata UNI ISO 2081
Material: Iron sheet subject to EN 10130
Surface treatment;passivated galvanisation subject to UNI ISO 2081

daN S Portata statica conforme UNI EN 12527 *

daN S Static load capacity conform UNI EN 12527 *

gr=Peso per 1 pezzo

gr=Weight for a piece

ø30-36/40-45-50/60/75

ITEM	30-36/L H44/SF	30-36/L/SF	40-45-50/L/SF	60/L/SF	75/L/SF
H	29	31.5	41	49	63
E-F	6.2-8.2	6.2-6.2	6.2-8.2	6.2-8.2	6.2-8.2
daN S	30	30	30	30	30
gr	45	49	72	78	96

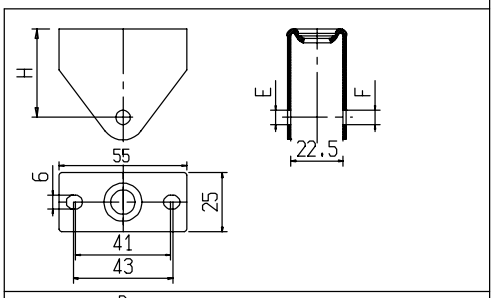

ITEM	30-36/L H44/SFF	30-36/L/SFF	40-45-50/L/SFF	60/L/SFF	75/L/SFF
H	29	31.5	41	49	63
E-F	6.2-8.2	6.2-6.2	6.2-8.2	6.2-8.2	6.2-8.2
daN S	30	30	30	30	30
gr	45	70	93	99	117

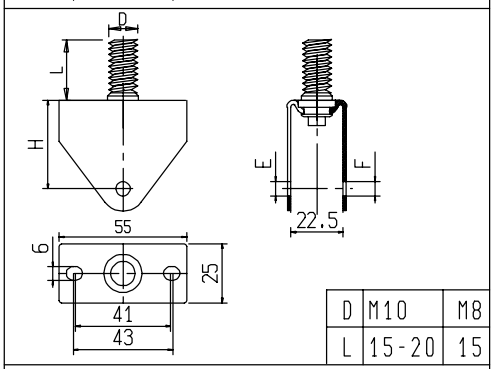

D	M10	M8
L	15-20	15

ITEM	30-36/L H44/SFP5	30-36/L/SFP5	40-45-50/L/SFP5	60/L/SFP5	75/L/SFP5
H	29	31.5	41	49	63
E-F	6.2-8.2	6.2-6.2	6.2-8.2	6.2-8.2	6.2-8.2
daN S	30	30	30	30	30
gr	42	95	118	124	142

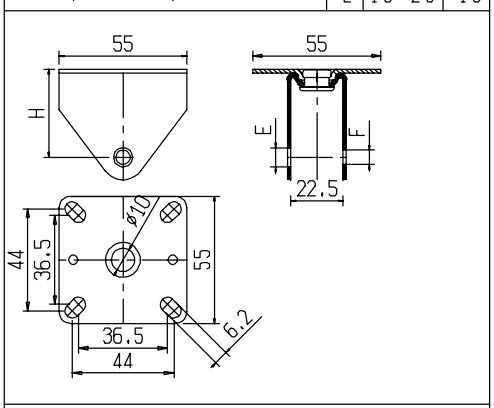

ITEM	40-45-50/L/SFP5I
H	41
E-F	6.2-8.2
daN S	30
gr	44

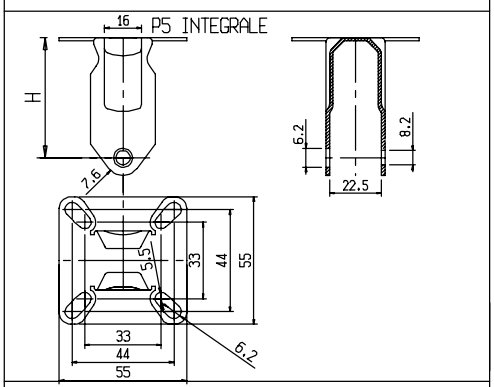

ITEM	30-36/L H44/SFP4	30-36/L/SFP4I	40/L/SFP4I	45/L/SFP4I	50/L/SFP4I
H	29	32.5	39	41.5	41.5
E-F	6.2-8.2	6.2-8.2	6.2-8.2	6.2-8.2	6.2-8.2
daN S	30	-	30	30	30
gr	62	-	76	76	76

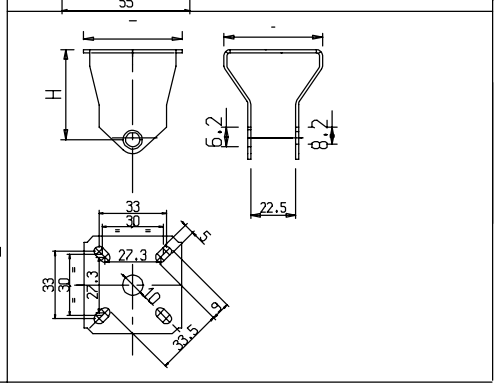

* La portata statica indicata per i soli supporti corrisponde a 1.5 portata dinamica verificata secondo UNI 12527 montando una ruota Nylon

* The static load capacity mentioned for the only forks correspond to 1.5 dynamic load capacity checked according to UNI 12527 assembling with a nylon wheel

Complessivi fissi serie L nelle varie tipologie di:Fissaggi,Ruote assemblate.
Fixed castors of L series in the various types of: fixings, assembled wheels

Requisiti dei Complessivi assemblati alle varie Ruote

Requirements of the castors assembled with the different wheels

Portata Dinamica conforme UNI EN 12527 Dynamic load capacity conform UNI EN 12527 daN D	Portata Statica conforme UNI EN 12522 Static load capacity conform UNI EN 12527 daN S

gr = Peso per 1 pezzo

gr = Weight for a piece

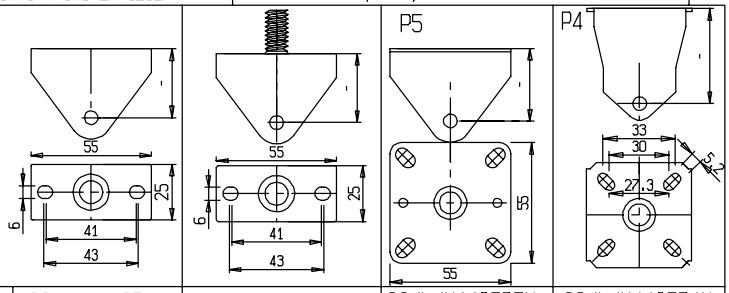

ø 30 H.44

ø 30 H.47.5

	ITEM	30/L/H44SFN	30/L/H44SFFN	30/L/H44SFP5N	30/L/H44SFP4N
30N	H	44	44	44	44
	D	40	40	40	40
	S	60	60	60	60
	gr	59	80	106	76
30PU	ITEM	30/L/H44SFPU	30/L/H44SFFPU	30/L/H44SFP5PU	30/L/H44SFP4PU
	H	44	44	44	44
	D	45	45	45	45
	S	67.5	67.5	67.5	67.5
	gr	64	85	111	81
30SR	ITEM	30/L/H44SFSR	30/L/H44SFFSR	30/L/H44SFP5SR	30/L/H44SFP4SR
	H	44	44	44	44
	D	20	20	20	20
	S	30	30	30	30
	gr	62	83	109	79

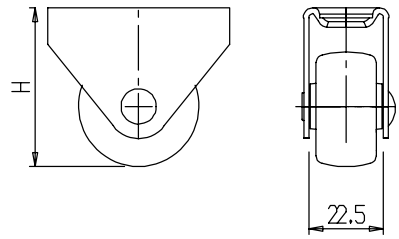

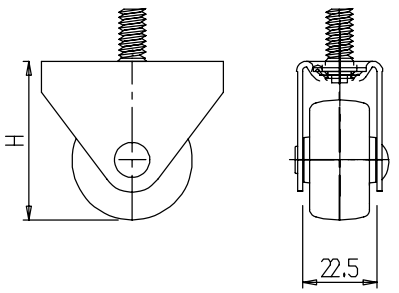

	ITEM	30/L/SFN	30/L/SFFN	30/L/SFP5N	30/L/SFP4N
30N	H	47.5	47.5	47.5	47.5
	D	40	40	40	40
	S	60	60	60	60
	gr	62	83	109	79
30PU	ITEM	30/L/SFPU	30/L/SFFPU	30/L/SFP5PU	30/L/SFP4PU
	H	47.5	47.5	47.5	47.5
	D	45	45	45	45
	S	67.5	67.5	67.5	67.5
	gr	67	88	114	84
30SR	ITEM	30/L/SFSR	30/L/SFFSR	30/L/SFP5SR	30/L/SFP4SR
	H	47.5	47.5	47.5	47.5
	D	20	20	20	20
	S	30	30	30	30
	gr	65	86	112	82

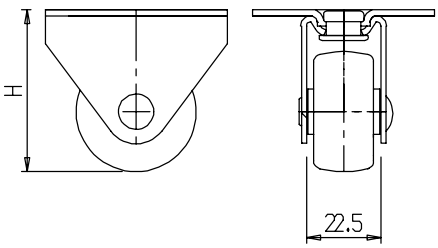

ø 36

	ITEM	36/L/SFN	36/L/SFFN	36/L/SFP5N	36/L/SFP4N
36N	H	50.5	50.5	50.5	50.5
	D	40	40	40	40
	S	60	60	60	60
	gr	67	88	114	84
36PU	ITEM	36/L/SFPU	36/L/SFFPU	36/L/SFP5PU	36/L/SFP4PU
	H	50.5	50.5	50.5	50.5
	D	55	55	55	55
	S	82.5	82.5	82.5	82.5
	gr	69	90	116	86
36SR	ITEM	36/L/SFSR	36/L/SFFSR	36/L/SFP5SR	36/L/SFP4SR
	H	50.5	50.5	50.5	50.5
	D	20	20	20	20
	S	30	30	30	30
	gr	67	88	114	84

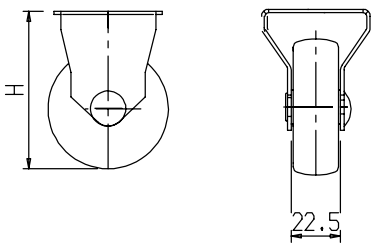

Complessivi fissi serie 40/45/L/SF nelle varie tipologie di:Fissaggi,Ruote assemblate.
Fixed castors of 40/45/L/SF series in the various types of: fixings, assembled wheels

Requisiti dei Complessivi assemblati alle varie Ruote
Requirements of the castors assembled with the different wheels

Portata Dinamica conforme UNI EN 12527 Dynamic load capacity conform UNI EN 12527 daN D	Portata Statica conforme UNI EN 12527 Static load capacity conform UNI EN 12527 daN S

gr = Peso per 1 pezzo
gr = Weight for a piece

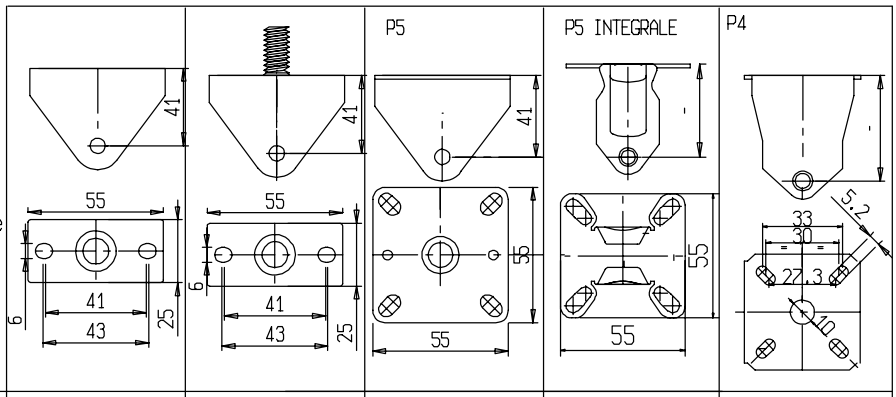

ø 40/45

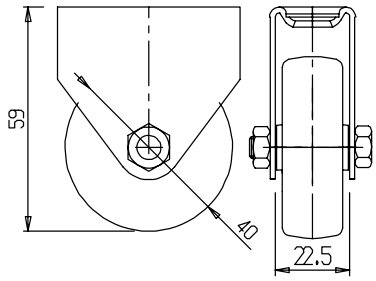

	ITEM	40/L/SFG	40/L/SFFG	40/L/SFP5G	40/L/SFP5IG	40/L/SFP4IG
40G 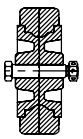	daN D	35	35	35	35	35
	daN S	52	52	52	52	52
	gr	110	132	157	78	111

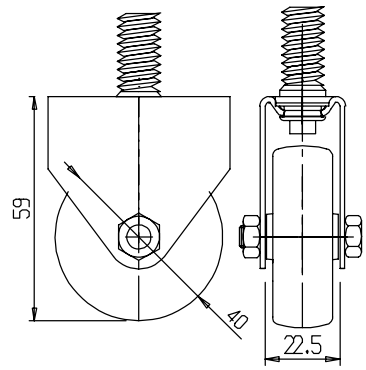

	ITEM	40/L/SFGd	40/L/SFFGd	40/L/SFP5Gd	40/L/SFP5IGd	40/L/SFP4IGd
40Gd 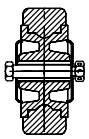	daN D	35	35	35	35	35
	daN S	52	52	52	52	52
	gr	115	137	162	83	116

	ITEM	40/L/SFPU	40/L/SFFPU	40/L/SFP5PU	40/L/SFP5IPU	40/L/SFP4IPU
40PU 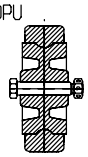	daN D	60	60	60	60	60
	daN S	90	90	90	90	90
	gr	113	135	160	81	114

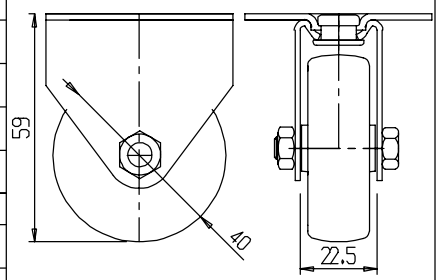

	ITEM	40/L/SFSR	40/L/SFFSR	40/L/SFP5SR	40/L/SFP5ISR	40/L/SFP4ISR
40SR 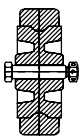	daN D	30	30	30	30	30
	daN S	45	45	45	45	45
	gr	106	128	153	74	107

P5 INTEGRALE

	ITEM	40/L/SFSRd	40/L/SFFSRd	40/L/SFP5SRd	40/L/SFP5ISRd	40/L/SFP4ISRd
40SRd 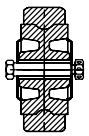	daN D	30	30	30	30	30
	daN S	45	45	45	45	45
	gr	109	131	156	77	110

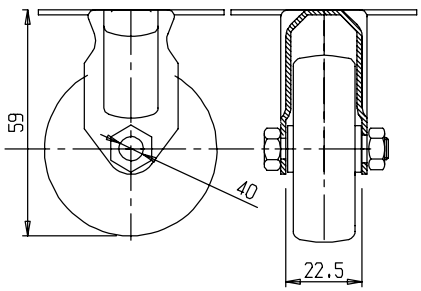

	ITEM	40/L/SFN	40/L/SFFN	40/L/SFP5N	40/L/SFP5IN	40/L/SFP4IN
40N 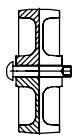	daN D	40	40	40	40	40
	daN S	60	60	60	60	60
	gr	100	121	146	67	100

	ITEM	45/L/SFN	45/L/SFFN	45/L/SFP5N	45/L/SFP5IN	45/L/SFP4IN
45N 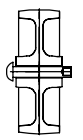	daN D	40	40	40	40	40
	daN S	60	60	60	60	60
	gr	106	127	152	73	106

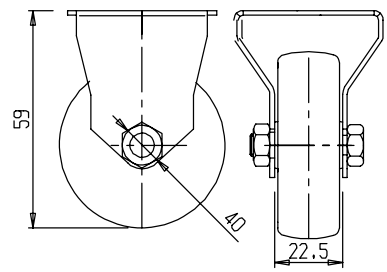

Complessivi fissi serie 50/L/SF nelle varie tipologie di:Fissaggi,Ruote assemblate.
Fixed castors of 50/L/SF series in the various types of: fixings, assembled wheels

Requisiti dei Complessivi assemblati alle varie Ruote
Requirements of the castors assembled with the different wheels

Portata Dinamica conforme UNI EN 12527 Dynamic load capacity conform UNI EN 12527 daN D	Portata Statica conforme UNI EN 12527 Static load capacity conform UNI EN 12527 daN S

gr = Peso per 1 pezzo
gr = Weight for a piece

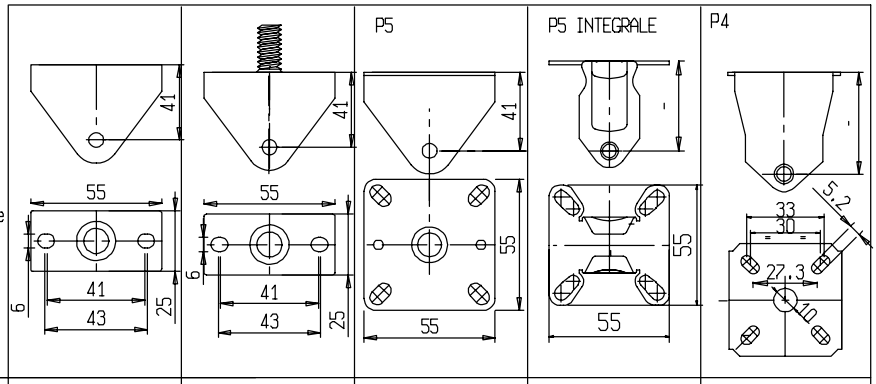

50G	ITEM	50/L/SFG	50/L/SFFG	50/L/SFP5G	50/L/SFP5IG	50/L/SFP4IG
	daN D	30	30	30	30	30
	daN S	45	45	45	45	45
	gr	118	139	164	91	135
50Gd	ITEM	50/L/SFGd	50/L/SFFGd	50/L/SFP5Gd	50/L/SFP5IGd	50/L/SFP4IGd
	daN D	30	30	30	30	30
	daN S	45	45	45	45	45
	gr	122	143	168	95	126
50GCC	ITEM	50/L/SFGCC	50/L/SFFGCC	50/L/SFP5GCC	50/L/SFP5IGCC	50/L/SFP4IGCC
	daN D	40	40	40	40	40
	daN S	60	60	60	60	60
	gr	128	149	174	93	132
50GdA	ITEM	50/L/SFGdA	50/L/SFFGdA	50/L/SFP5GdA	50/L/SFP5IGdA	50/L/SFP4IGdA
	daN D	40	40	40	40	40
	daN S	60	60	60	60	60
	gr	126	147	172	86	130
50GcA	ITEM	50/L/SFGcA	50/L/SFFGcA	50/L/SFP5IGcA	50/L/SFP5IGcA	50/L/SFP4IGcA
	daN D	40	40	40	40	40
	daN S	60	60	60	60	60
	gr	165	186	211	125	169
50PU	ITEM	50/L/SFPU	50/L/SFFPU	50/L/SFP5PU	50/L/SFP5IPU	50/L/SFP4IPU
	daN D	80	80	80	80	80
	daN S	120	120	120	120	120
	gr	130	151	176	90	134
50SR	ITEM	50/L/SFSR	50/L/SFFSR	50/L/SFP5SR	50/L/SFP5ISR	50/L/SFP4ISR
	daN D	30	30	30	30	30
	daN S	45	45	45	45	45
	gr	106	127	152	74	117
50SRd	ITEM	50/L/SFSRd	50/L/SFFSRd	50/L/SFP5SRd	50/L/SFP5ISRd	50/L/SFP4ISRd
	daN D	30	30	30	30	30
	daN S	45	45	45	45	45
	gr	136	157	206	120	164
50N	ITEM	50/L/SFN	50/L/SFFN	50/L/SFP5N	50/L/SFP5IN	50/L/SFP4IN
	daN D	60	60	60	60	60
	daN S	90	90	90	90	90
	gr	100	121	146	60	105
50Nd	ITEM	50/L/SFNd	50/L/SFFNd	50/L/SFP5Nd	50/L/SFP5INd	50/L/SFP4INd
	daN D	60	60	60	60	60
	daN S	90	90	90	90	90
	gr	112	133	158	72	117

ø 50

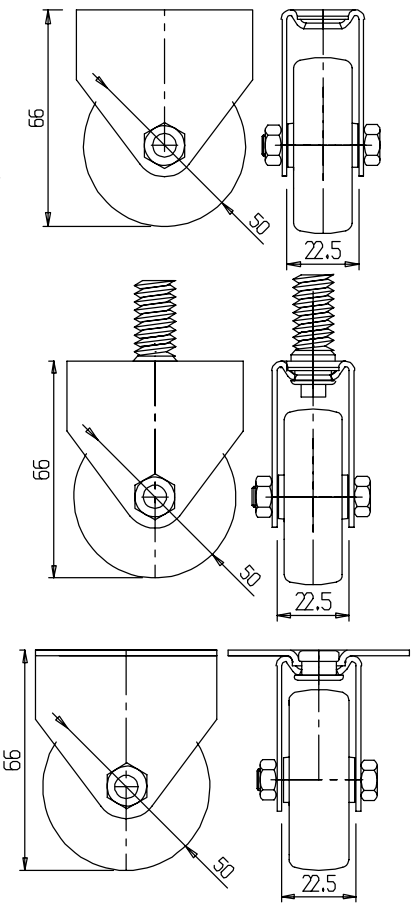

P5 INTEGRALE

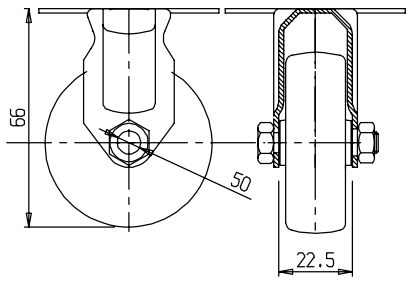

P4 INTEGRALE

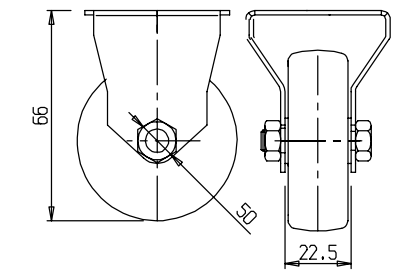

Complessivi fissi serie 60/L nelle varie tipologie di:Fissaggi,Ruote assemblate

Fixed castors of 60/L series in the various types of: fixings, assembled wheels

Requisiti dei Complessivi assemblati alle varie Ruote

Requirements of the castors assembled with the different wheels

Portata Dinamica conforme UNI EN 12527 Dynamic load capacity conform UNI EN 12527 daN D	Portata Statica conforme UNI EN 12527 Static load capacity conform UNI EN 12527 daN S

gr= Peso per 1 pezzo

gr= Weight for a piece

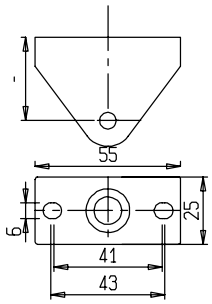

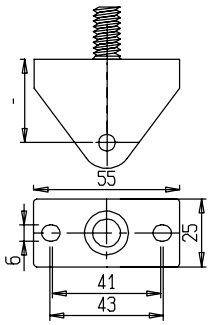

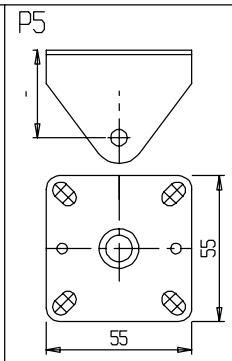

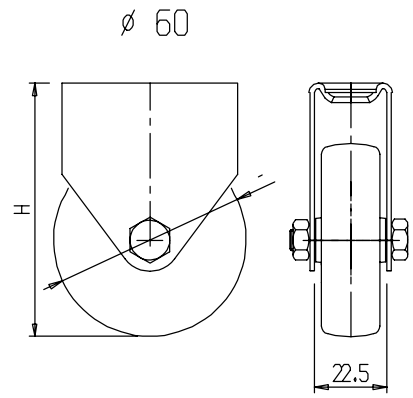

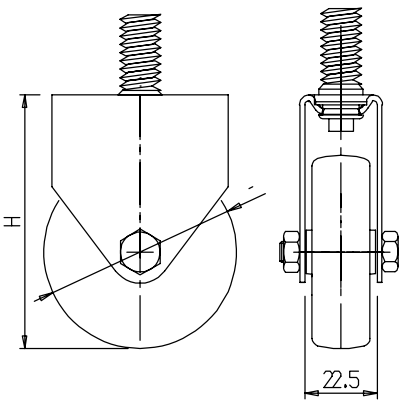

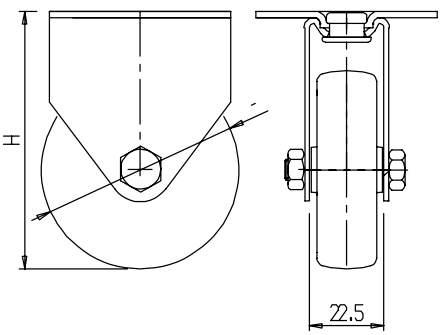

60G 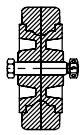	ITEM	60/L/SFG	60/L/SFFG	60/L/SFP5G
	H	79	79	79
	daN D	-	-	-
	daN S	-	-	-
	gr	154	175	205
60Gd 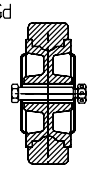	ITEM	60/L/SFGd	60/L/SFFGd	60/L/SFP5Gd
	H	79	79	79
	daN D	-	-	-
	daN S	-	-	-
	gr	168	189	219

ITEM	60/L/G-Gd	ITEM	60/L/G-Gd
	con Asse Rivettato With riveted axle		Nucleo Grigio Grey Centre

60N 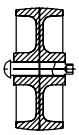	ITEM	60/L/SFN	60/L/SFFN	60/L/SFP5N
	H	79	79	79
	daN D	-	-	-
	daN S	-	-	-
	gr	115	136	166
60Nd 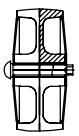	ITEM	60/L/SFNd	60/L/SFFNd	60/L/SFP5Nd
	H	79	79	79
	daN D	-	-	-
	daN S	-	-	-
	gr	137	158	188

Complessivi fissi serie 75/L nelle varie tipologie di:Fissaggi,Ruote assemblate

Fixed castors of 75/L series in the various types of: fixings, assembled wheels

Requisiti dei Complessivi assemblati alle varie Ruote

Requirements of the castors assembled with the different wheels

Portata Dinamica conforme UNI EN 12527 Dynamic load capacity conform UNI EN 12527 daN D	Portata Statica conforme UNI EN 12527 Static load capacity conform UNI EN 12527 daN S

gr = Peso per 1 pezzo

gr = Weight for a piece

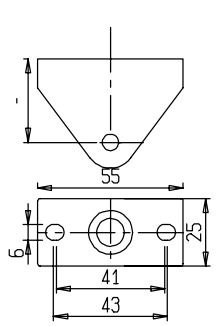

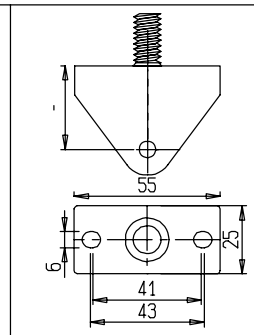

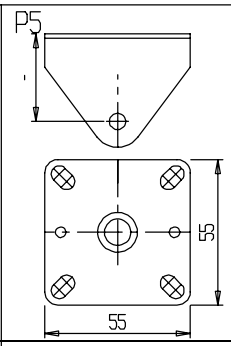

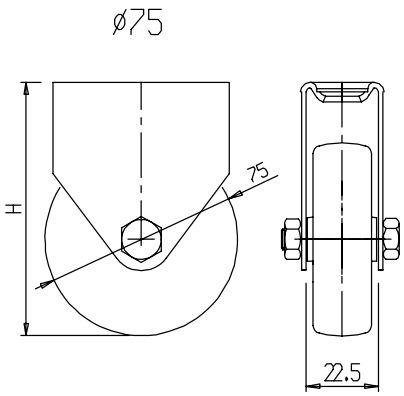

	ITEM	75/L/SFG	75/L/SFFG	75/L/SFP5G
75G 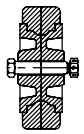	H	101	101	101
	daN D	40	40	40
	daN S	60	60	60
	gr	189	210	235
75Gd 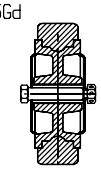	ITEM	75/L/SFGd	75/L/SFFGd	75/L/SFP5Gd
	H	101	101	101
	daN D	40	40	40
	daN S	60	60	60
	gr	212	233	258

ITEM	75/L/G-Gd
	con Asse Rivettato With riveted axle

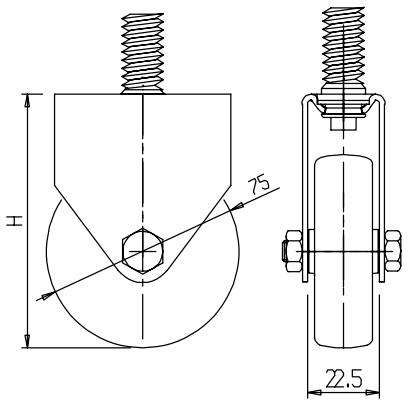

	ITEM	75/L/SFN	75/L/SFFN	75/L/SFP5N
75N 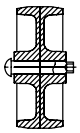	H	101	101	101
	daN D	60	60	60
	daN S	90	90	90
	gr	115	136	166
75Nd 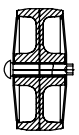	ITEM	75/L/SFNd	75/L/SFFNd	75/L/SFP5Nd
	H	101	101	101
	daN D	60	60	60
	daN S	90	90	90
	gr	142	163	188

ITEM	75/L/N-Nd
	con Asse a Vite With screw axle

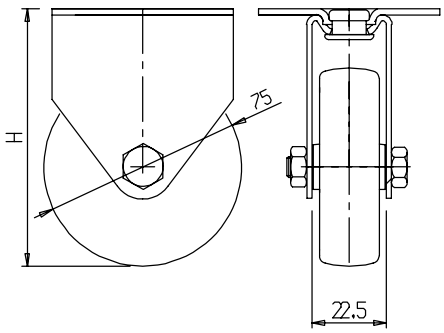

Requisiti Ruote Serie L ø30 inox, nelle varie tipologie di: Battistrada, Organi di Rotolamento
Wheels requirements of L Series ø30 INOX in the various types of tyres and rolling parts.

Ruota tipo Wheel type		PU	SR		N		
Catteristiche del Battistrada Tyre characteristics		Poliuretano Rosso Polyurethane Red	Gomma Sintetica Synthetic Rubber		Ruota Monolitica Nylon Bianco White Nylon Monolithic Wheel		
Durezza del Battistrada conforme UNI EN 12527 Tyre hardness in compliance with UNI EN 12527	Shore A	85	78		>100	>100	>100
Temperature di Utilizzo Raccomandate Recommended working temperatures	Max=	+40°C	+60°C		+40°C	+40°C	+40°C
	Min=	-5°C	-10°C		0°C	0°C	0°C
Catteristiche del Nucleo Wheel centre characteristics		Nylon Bianco White Nylon	Polipropilene Grigio Grey Polipropylene				
Catteristiche del Mozzo Hub characteristics		Foro Liscio Plain Bearing	Foro Liscio / Tubo Parafilo Plain Bearing / Tube Threadguard		Foro Liscio Plain Bearing	Tubo inox Parafilo inox Tube Threadguard	

Portata Dinamica conforme UNI EN 12527 Dynamic load capacity conform UNI EN 12527	daN D	Resistenza al Rotolamento (FR) alla Portata Nominale Rolling resistance (FR)at rated capacity	daN FR
Portata Statica conforme UNI EN 12527 Static load capacity conform UNI EN 12527	daN S	Resistenza al Superamento Ostacolo (FO) alla Portata Nominale H ostacolo=1% ø della Ruota Min 0.5 mm Obstacle overcoming resistance (FO) at rated capacity Obstacle H=1% of wheel, min.0.5 mm	daN FO

gr = Peso per 1 pezzo
gr = Weight for a piece

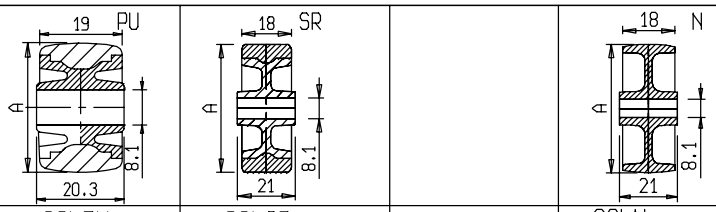

ITEM	30LPU	30LSR	30LN
HOLE 8	FORO 8	FORO 8	FORO 8
A	30	30	30
daN D	40	30	20
daN S	60	45	30
gr	12	14	7

Gamma di Fissaggi Standard per Supporti Serie L- LFT in Acciaio Inox

Range of standard fixings for L-LFT Series forks in stainless steel

A Foro Filettato per Vite di Fissaggio Imbus M6x20 (*) With thereaded hole of for fixing screw imbus M6x20 (*)	A Foro Passante ø10 per Vite di Fissaggio Imbus M8x20 (*) With bolt hole of ø10 for fixing screw imbus M8x20 (*)
B6 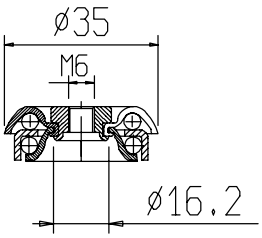 * Lunghezza della Vite Inseribile con Ruota Assemblata Length of screw that can be inserted with assembled wheel	0 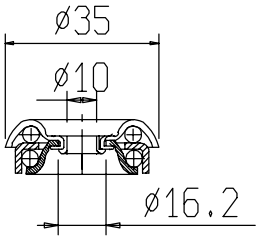 * Lunghezza della Vite Inseribile con Ruota Assemblata Length of screw that can be inserted with assembled wheel

Supporti girevoli Serie L in Acciaio Inox per i vari Diametri di Ruote e Gamma di Fissaggi
L Series swivel forks in stainless steel for the various wheels diameters and range of fixings

Materiale: Lamiera inox AISI 304
Trattamanto superficiale: Brillantatura
Corona sfere superiore: n. 18 sfere 5/32" inox ingrassate
Corona sfere inferiore: n. 18 sfere 5/32" inox ingrassate
Material: Stainless steel sheet AISI 304
Surface brilliant polishing
Upper ball crown N. 18 inox greased balls
Lower ball crown N.18 inox greased balls

daN S Portata Statica conforme UNI EN 12527 *
daN S Static load capacity conform UNI EN 12527 *

gr=Peso per 1 pezzo
gr=Weight for a piece

	B6	0
ITEM	30/L/B6 Inox	30/L/0 Inox
daN S	30	30
gr	52	52

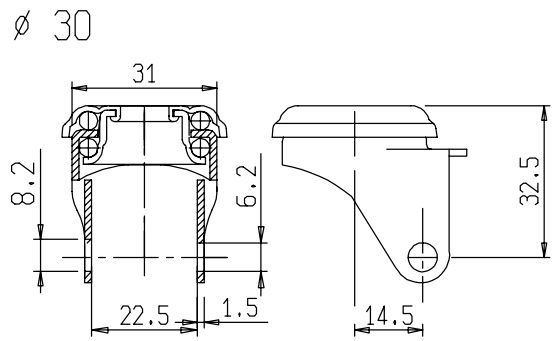

Complessivi girevoli Serie L in Acciaio Inox nelle varie tipologie di:Fissaggi,Ruote assemblate.
Swivel castors of the L series in stainless steel with different types of fixings, assembled wheels.

Requisiti dei Complessivi assemblati alle varie Ruote Requirements of the castors assembled with the different wheels		N	PU	SR
Portata Dinamica conforme UNI EN 12527 Dynamic load capacity conform UNI EN 12527	daN D	28	40	22.7
Portata Statica conforme UNI EN 12527 Static load capacity conform UNI EN 12527	daN S	42	60	34

gr= Peso per 1 pezzo
gr= Weight for a piece

	B6	0
Nylon Bianco White Nylon 30N		
ITEM	30/L/NB6 Inox	30/L/N0 Inox
gr	66	66
Poliuretano Rosso Polyurethane Red 30PU		
ITEM	30/L/PUB6 Inox	30/L/PU0 Inox
gr	71	71
Gomma Sintetica Synthetic Rubber 30SR		
ITEM	30/L/SRB6 Inox	30/L/SR0 Inox
gr	64	64

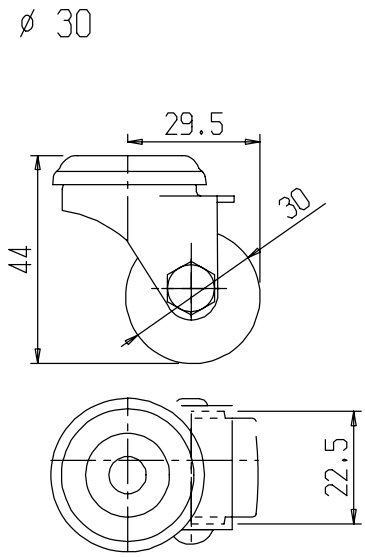

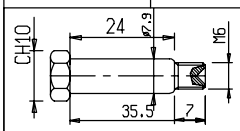

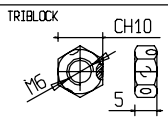

ITEM	67	ASSE INOX INOX AXLE	ITEM	289	DADO M6 TRIBLOCK INOX M6 TRIBLOCK INOX NUT
gr	9		gr	2	

Ruote Adottate per Serie ML nelle varie tipologie di Diametri,Battistrada.
Wheels used for ML series in the various types of diameters and tyres.

Ruota tipo / Wheel type	G	Gd	GCC	GdA	GcA	PU	SR	SRd	N	Nd
Catteristiche del Battistrada / Tyre characteristics	Gomma Grigia / Grey Rubber		Anello Gomma Grigia / Grey Rubber Ring	Anello Gomma Conduttiva Nera / Conductive Black Rubber Ring		Poliuretano Colore Arancio / Polyuretane Orange Color	Gomma Sintetica / Synthetic Rubber		Ruota Monolitica Nylon Nero / Black Nylon Monolithic Wheel	
Durezza del Battistrada conforme UNI EN 12527 / Tyre hardness in compliance with UNI EN 12527	Shore A									
	76	76	76	85	85	85	78		>100	>100
Temperature di Utilizzo Raccomandate / Recommended working temperatures — Max=	+70°C	+70°C	+70°C	+40°C	+40°C	+40°C	+60°C		+40°C	+40°C
Min=	-30°C	-30°C	-30°C	-5 C	-5 C	-5 C	-10°C		0°C	0°C
Catteristiche del Nucleo / Wheel centre characteristics	Polipropilene Nero / Black Polypropylene		Nylon Nero / Black Nylon	Nylon Nero Conduttivo / Conductive Black Nylon		Nylon Bianco / White Nylon	Polipropilene Grigio / Grey Polipropylene			
Catteristiche del Mozzo / Hub characteristics	Foro Liscio / Plain Bearing	Tubo Parafilo / Tube Threadguard	Cuscinetto a Sfera Parafilo / Ball Bearing Threadguard	Foro Liscio / Plain Bearing	Cuscinetto a Sfera Parafilo / Ball Bearing Threadguard	Foro Liscio / Plain Bearing	Foro Liscio / Plain Bearing	Tubo Parafilo / Tube Threadguard	Foro Liscio / Plain Bearing	Tubo Parafilo / Tube Threadguard

Portata Dinamica conforme UNI EN 12527 / Dynamic load capacity conform UNI EN 12527 — daN D

Resistenza al Rotolamento (FR) alla Portata Nominale / Rolling resistance (FR)at rated capacity — daN FR

gr = Peso per 1 pezzo / gr = Weight for a piece

Portata Statica conforme UNI EN 12527 / Static load capacity conform UNI EN 12527 — daN S

Resistenza al Superamento Ostacolo (FO) alla Portata Nominale H ostacolo=1% ø della Ruota Min 0.5 mm / Obstacle overcoming resistance (FO) at rated capacity Obstacle H=1% of wheel, min.0.5 mm — daN FO

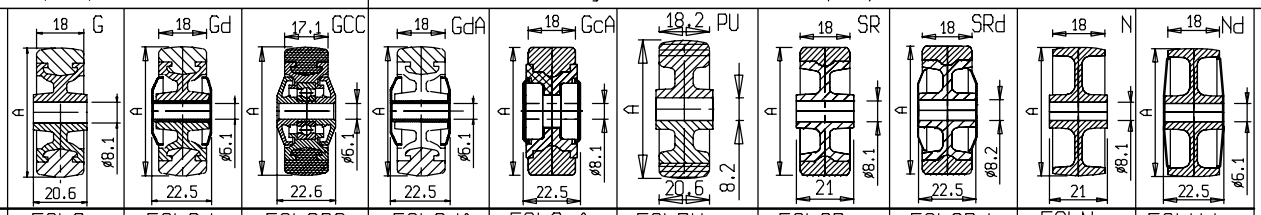

ITEM	50LG	50LGd	50LGCC	50LGdA	50LGcA	50LPU	50LSR	50LSRd	50LN	50LNd
A	50	50	50	50	50	50	50	50	50	50
daN D	30	30	40	40	40	80	30	30	60	60
daN S	45	45	60	60	60	120	45	45	90	90
daN FR	2.7	2.7	2.7	2.7	2.7	2.7	1.5	1.5	1.4	1.4
daN FO	4.0	4.0	4.0	4.0	4.0	4.0	4.5	4.5	6.0	6.0
gr	31	41	42	45	74	30	20	32	17	33
ITEM	60LG								60LN	60LNd
A	60								60	60
daN D	32								32	32
daN S	45								45	45
daN FR	2,45								1,37	1.37
daN FO	4,0								6,0	6
gr	60								25	43

Assali,Cuscinetto e Parafili per Ruote Serie ML

Axles, Bearings and thread guards for wheels of the ML series

Raccomandazione Adozione Assali per le varie tipologie di Ruote
Recommendation for the adoption of axles in the different types of wheels

L/G	L/Gd-GdA	L/GCC	L/GcA	L/PU	L/SR	L/SRd	L/N	L/Nd
ITEM 62 291	ITEM 78 291	ITEM 78 291	ITEM 77 291	ITEM 62 291	ITEM 62 291	ITEM 78 291	ITEM 55 -	ITEM 73 -
ITEM 55 -	ITEM 73 -	ITEM 73 -	ITEM - -	ITEM 55 -	ITEM 55 -	ITEM 73 -	ITEM 62 291	ITEM 78 291
	ITEM 980 -	ITEM - -	ITEM - -		ITEM - -	ITEM 980 -	ITEM - -	ITEM 980 -

ITEM	gr	
62	13	ASSE VITE (624/RID)
	-	SCREW AXLE (624/RID)

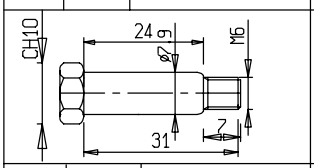

ITEM	gr	
78	9	ASSE RID/M6x30
	-	SCREW RID/M6X30

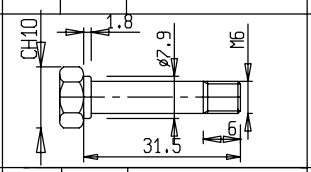

ITEM	gr	
291	2	M6
	-	M6

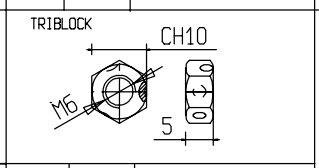

ITEM	gr	
599	15	CUSCINETTO L 8x22x10.3 a sfera per ruote: 50LGc
	-	BALL BEARING L 8x22x10.3 for whells: 50LGc

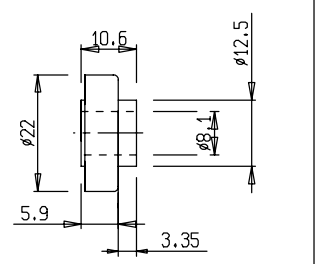

ITEM	gr	
55	11	ASSE RIB (4050/ASR)
	-	RIVETED AXLE (4050/ASR)

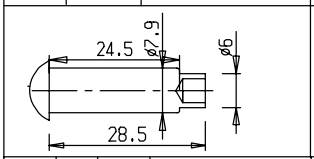

ITEM	gr	
73	7	ASSE RIB ASS/M6x28
	-	RIVETED AXLE ASS/M6x28

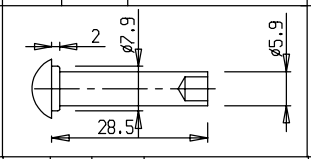

ITEM	gr	
980	4	TUBINO 8x1x22
	-	TUBE 8x1x22

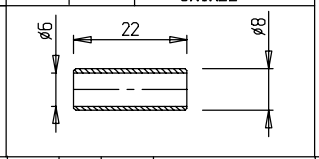

gr = Peso per 1 pezzo

gr = Weight for a piece

ITEM	gr		
391	2	-	PARAFILI per RUOTE 50LGdA / THREADGUARDS for WHEELS 50LGdA

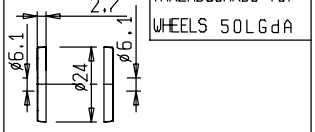

ITEM	gr		
362	2	-	PARAFILI per RUOTE 50LGd / THREADGUARDS for WHEELS 50LGd

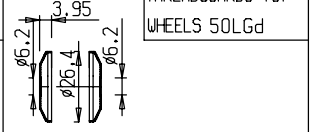

ITEM	gr		
400	2	-	PARAFILI per RUOTE 60LNd / THREADGUARDS for WHEELS 60LNd

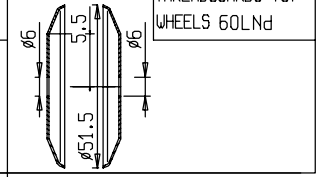

ITEM	gr		
377	1.20		PARAFILI NYLON GRIS per RUOTE 50LGCC / GREY NYLON THREADGUARD for WHEELS 50LGCC

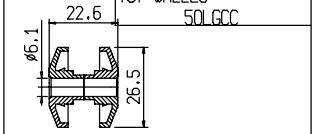

ITEM	gr		
391 395	4	-	PARAFILI per RUOTE 50LGcA / THREADGUARDS for WHEELS 50LGcA

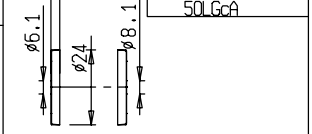

ITEM	gr		
363	2	-	PARAFILI per RUOTE 50LSRd / THREADGUARDS for WHEELS 50LSRd

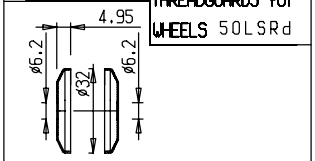

ITEM	gr		
396	6	-	PARAFILI per RUOTE 50LNd / THREADGUARDS for WHEELS 50LNd

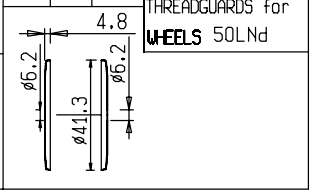

Gamma di Fissaggi Standard per Supporti Serie ML MLFT

Range of standard fixings for forks of the ML and MLFT series

A Foro Passante ø8.2
per Vite di Fissaggio Imbus M10x25 (*)
With bolt hole of ø 8.2 for fixing screw IMBUS M10X25 (*)

A Foro Passante ø10.2
per Vite di Fissaggio Imbus M10x25 (*)
With bolt hole of ø 10.2 for fixing screw IMBUS M10X25 (*)

A Perno Filettato Rivettato eo Vite Imbus fissata
Dimensioni da tabella da Specificare sempre all' Ordine
With riveted thread stem,and/or fixed Imbus screw dimensions as per table to be specified when placing order

B8

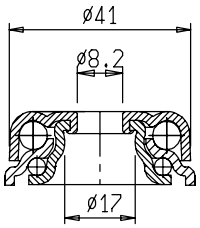

* Lunghezza della Vite Inseribile con Ruota Assemblata
* Length of screw that can be inserted in the assembled wheel

B10

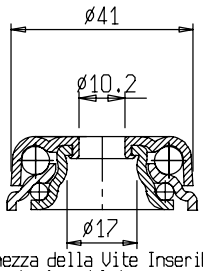

* Lunghezza della Vite Inseribile con Ruota Assemblata
* Length of screw that can be inserted in the assembled wheel

F

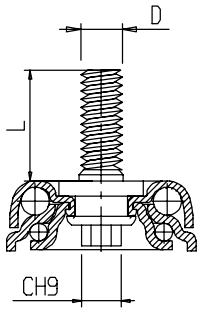

D	M10	M12
L	15-20-25-30	15-25

F

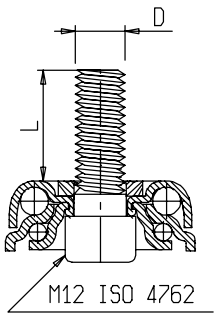

D	M12
L	9-13-18-23-28-33-38-43-53

Fissaggio a Piastra Integrale PI 60X60

Integral Plate fixing PI 60x60

PI

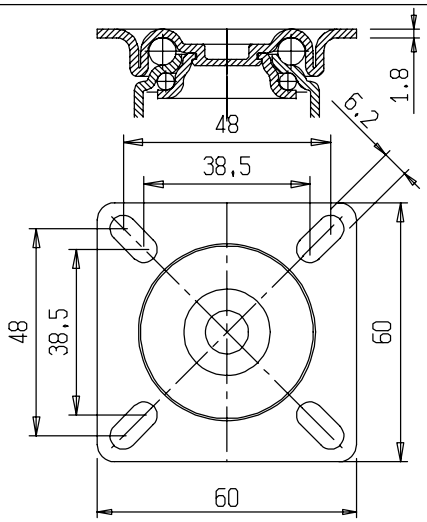

Diverse Asolature sono Eseguibili,
Inscritte nel Perimetro Esterno
Possibility of various slots made in the external perimeter

Fissaggio a Piastra Integrale P7 68.5x48

Integral Plate fixing P7 68.5x48

P7

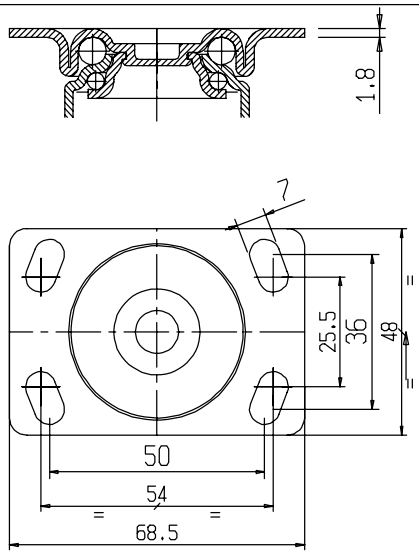

Diverse Asolature sono Eseguibili,
Inscritte nel Perimetro Esterno
Possibility of various slots made in the external perimeter

Supporti girevoli Serie ML e MLFT per i vari Diametri di Ruote e Gamma di Fissaggi
Swivel forks of the ML-MLFT series for the various wheels diameters and range of fixings

Materiale: Lamiera ferro secondo standard EN 10130
Trattamanto superficiale: Zincatura passivata UNI ISO 2081
Corona sfere superiore: n. 14 sfere 1/4" ingrassate
Corona sfere inferiore: n. 22 sfere 5/32" ingrassate
Material: Iron sheet subject to EN 10130
Surface treatment: passivated galvanisation subject to UNI ISO 2081
Upper ball crown N.14 greased balls 1/4
Lower ball crown N.22 greased balls 5/32

daN S Portata Statica conforme UNI EN 12527
daN S Static load caspacity conform uni en 12527

gr = Peso per 1 pezzo
gr = Weight for a piece

	B8	B10	F	PI	P7 68.5x48
				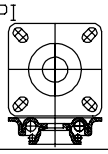	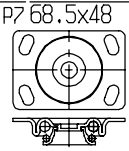
ITEM	50/ML/B8	50/ML/B10	50/ML/F	50/ML/PI	50/ML/P7
H	46	46	46	46	46
B	26	26	26	26	26
daN S	-	-	-	-	-
gr	122	122	147	150	147
ITEM	60/ML/B8	60/ML/B10	60/ML/F	60/ML/PI	60/ML/P7
H	52	52	52	52	52
B	27	27	27	27	27
daN S	-	-	-	-	-
gr	128	128	153	156	153

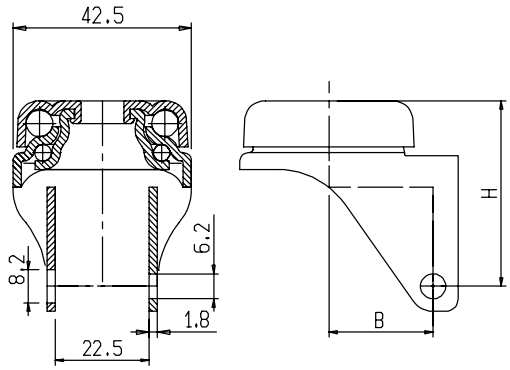

ITEM	50/MLFT/B8	50/MLFT/B10	50/MLFT/F	50/MLFT/PI	50/MLFT/P7
H	46	46	46	46	46
F	80	80	80	80	80
daN S	-	-	-	-	-
gr	162	162	187	190	187
ITEM	60/MLFT/B8	60/MLFT/B10	60/MLFT/F	60/MLFT/PI	60/MLFT/P7
H	52	52	52	52	52
F	80	80	80	80	80
daN S	-	-	-	-	-
gr	168	168	193	196	193

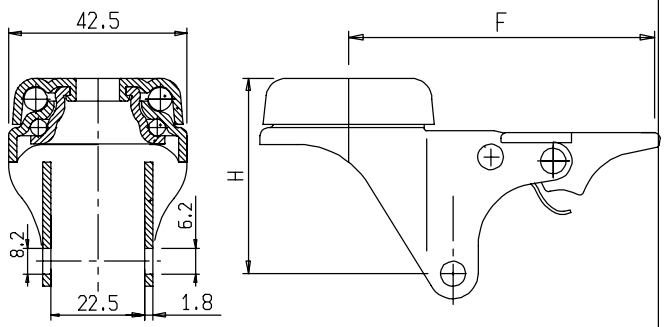

* La portata statica indicata per i soli supporti corrisponde a 1.5 portata dinamica verificata secondo UNI 12527 montando una ruota in Nylon

* The static load capacity mentioned for the only forks correspond to 1.5 of dynamic load capacity checked accoding to UNI 12527 assembling with a nylon wheel

Complessivi girevoli Serie 50 ML nelle varie tipologie di:Fissaggi,Ruote assemblati

Swivel castors of the 50 ML series with different types of fixings, assembled wheels

Requisiti dei Complessivi assemblati alle varie Ruote Requirements of the castors assembled with the different wheels		G	Gd	GCC	PU	SR	SRd	N	Nd
Portata Dinamica conforme UNI EN 12527 Dynamic load capacity conform UNI EN 12527	daN D	45	45	45	80	40	40	54	54
Portata Statica conforme UNI EN 12527 Static load capacity conform UNI EN 12527	daN S	67	67	67	120	60	60	81	81

gr = Peso per 1 pezzo

gr = Weight for a piece

B8 ø8,2 | B10 ø10,2 | F | PI | P7 68.5x48

	ITEM	B8	B10	F	PI	P7
50G	gr	50/ML/GB8	50/ML/GB10	50/ML/GF	50/ML/GPI	50/ML/GP7
		173	173	198	237	206
50Gd	gr	50/ML/GdB8	50/ML/GdB10	50/ML/GdF	50/ML/GdPI	50/ML/GdP7
		180	180	205	216	213
50GCC	gr	50/ML/GCCB8	50/ML/GCCB10	50/ML/GCCF	50/ML/GCCPI	50/ML/GCCP7
		184	184	209	221	218
50GdA	gr	50/ML/GdAB8	50/ML/GdAB10	50/ML/GdAF	50/ML/GdAPI	50/ML/GdAP7
		-	-	-	-	-
50GcA	gr	50/ML/GcAB8	50/ML/GcAB10	50/ML/GcAF	50/ML/GcAPI	50/ML/GcAP7
		-	-	-	-	-
50PU	gr	50/ML/PUB8	50/ML/PUB10	50/ML/PUF	50/ML/PUPI	50/ML/PUP7
		172	172	197	236	205
50SR	gr	50/ML/SRB8	50/ML/SRB10	50/ML/SRF	50/ML/SRPI	50/ML/SRP7
		159	159	184	207	204
50SRd	gr	50/ML/SRdB8	50/ML/SRdB10	50/ML/SRdF	50/ML/SRdPI	50/ML/SRdP7
		166	166	191	214	211
50N	gr	50/ML/NB8	50/ML/NB10	50/ML/NF	50/ML/NPI	50/ML/NP7
		150	150	175	188	185
50Nd	gr	50/ML/NdB8	50/ML/NdB10	50/ML/NdF	50/ML/NdPI	50/ML/NdP7
		158	158	183	196	170

ø 50

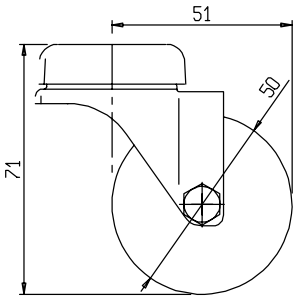

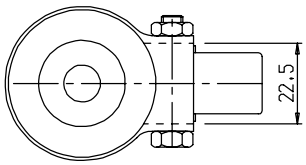

Complessivi girevoli Serie 60 ML nelle varie tipologie di:Fissaggi,Ruote assemblati
Swivel castors of the 60 ML series with different types of fixings, assembled wheels

Requisiti dei Complessivi assemblati alle varie Ruote Requirements of the castors assembled with the different wheels		G	N	Nd
Portata Dinamica conforme UNI EN 12527 Dynamic load capacity conform UNI EN 12527	daN D	45	58	58
Portata Statica conforme UNI EN 12527 Static load capacity conform UNI EN 12527	daN S	67	87	87

	B8	B10	F	PI	P7 68.5x48
gr = Peso per 1 pezzo gr=Weight for a piece	ø8.2	ø10.2	L		

	ITEM					
60G	ITEM	60/ML/GB8	60/ML/GB10	60/ML/GF	60/ML/GPI	60/ML/GP7
	gr	199	199	224	238	235
60N	ITEM	60/ML/NB8	60/ML/NB10	60/ML/NF	60/ML/NPI	60/ML/NP7
	gr	164	164	189	203	200
60Nd	ITEM	60/ML/NdB8	60/ML/NdB10	60/ML/NdF	60/ML/NdPI	60/ML/NdP7
	gr	186	186	211	225	222

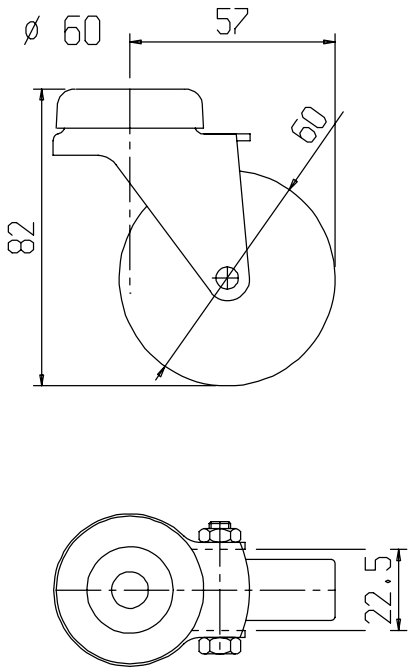

Complessivi girevoli Serie50 MLFT nelle varie tipologie di:Fissaggi,Ruote assemblati
Swivel castors of the 50 MLFT series with different types of fixings, assembled wheels

Requisiti dei Complessivi assemblati alle varie Ruote Requirements of the castors assembled with the different wheels		G	Gd	GCC	PU	SR	SRd	N	Nd
Portata Dinamica conforme UNI EN 12527 Dynamic load capacity conform UNI EN 12527	daN D	45	45	45	80	40	40	54	54
Portata Statica conforme UNI EN 12527 Static load capacity conform UNI EN 12527	daN S	67	67	67	120	60	60	81	81
Resistenza Passiva del Dispositivo Frenante Conforme UNI EN 12527 Passive resistance of braking devicein compliance with UNI EN 12527	daN FT	10	10	10	-	-	-	16	16

gr =Peso per 1 pezzo
gr =Weight for a piece

		B8	B10	F	PI	P7 68.5x48
		ø8,2	ø10,2	L		
50G	ITEM	50/MLFT/GB8	50/MLFT/GB10	50/MLFT/GF	50/MLFT/GPI	50/MLFT/GP7
	gr	209	209	234	237	234
50Gd	ITEM	50/MLFT/GdB8	50/MLFT/GdB10	50/MLFT/GdF	50/MLFT/GdPI	50/MLFT/GdP7
	gr	213	213	238	241	238
50GCC	ITEM	50/MLFT/GCCB8	50/MLFT/GCCB10	50/MLFT/GCCF	50/MLFT/GCCPI	50/MLFT/GCCP7
	gr	216	216	241	244	241
50GdA	ITEM	50/MLFT/GdAB8	50/MLFT/GdAB10	50/MLFT/GdAF	50/MLFT/GdAPI	50/MLFT/GdAP7
	gr	-	-	-		-
50GcA	ITEM	50/MLFT/GcAB8	50/MLFT/GcAB10	50/MLFT/GcAF	50/MLFT/GcAPI	50/MLFT/GcAP7
	gr	-	-	-	-	-
50PU	ITEM	50/MLFT/PUB8	50/MLFT/PUB10	50/MLFT/PUF	50/MLFT/PUPI	50/MLFT/PUP7
	gr	208	208	233	276	241
50SR	ITEM	50/MLFT/SRB8	50/MLFT/SRB10	50/MLFT/SRF	50/MLFT/SRPI	50/MLFT/SRP7
	gr	195	195	220	223	220
50SRd	ITEM	50/MLFT/SRdB8	50/MLFT/SRdB10	50/MLFT/SRdF	50/MLFT/SRdPI	50/MLFT/SRdP7
	gr	202	202	227	250	247
50N	ITEM	50/MLFT/NB8	50/MLFT/NB10	50/MLFT/NF	50/MLFT/NPI	50/MLFT/NP7
	gr	190	190	215	218	215
50Nd	ITEM	50/MLFT/NdB8	50/MLFT/NdB10	50/MLFT/NdF	50/MLFT/NdPI	50/MLFT/NdP7
	gr	198	198	223	226	223

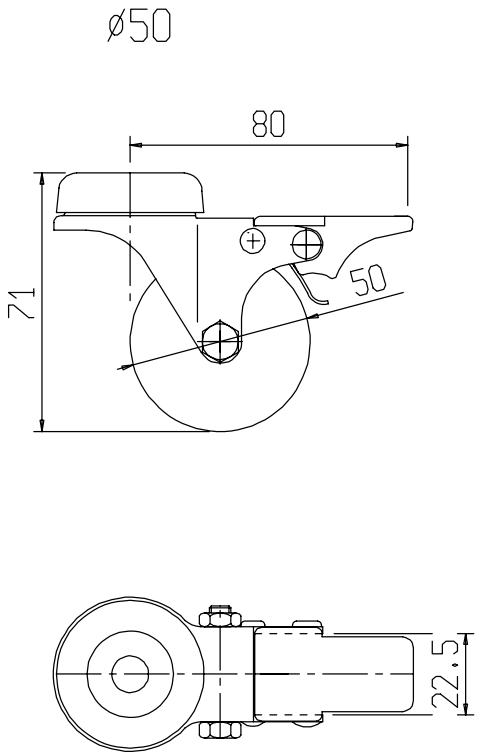

Complessivi girevoli Serie 60 MLFT nelle varie tipologie di:Fissaggi,Ruote assemblati
Swivel castors of the 60 MLFT series with different types of fixings, assembled wheels

Requisiti dei Complessivi assemblati alle varie Ruote Requirements of the castors assembled with the different wheels		G	N	Nd
Portata Dinamica conforme UNI EN 12527 Dynamic load capacity conform UNI EN 12527	daN D	45	58	58
Portata Statica conforme UNI EN 12527 Static load capacity conform UNI EN 12527	daN S	67	87	87
Resistenza Passiva del Dispositivo Frenante Conforme UNI EN 12527 Passive resistance of braking devicein compliance with UNI EN 12527	daN FT	-	-	-

gr = Peso per 1 pezzo
gr = Weight for a piece

B8 ø8.2 | B10 ø10.2 | F | PI | P7 68.5x48

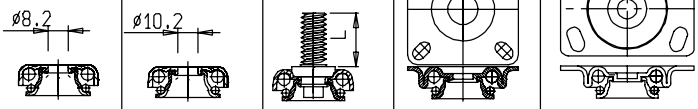

	ITEM	60/MLFT/GB8	60/MLFT/GB10	60/MLFT/GF	60/MLFT/GPI	60/MLFT/GP7
60G 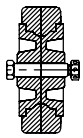	gr	244	244	269	272	269

	ITEM	60/MLFT/NB8	60/MLFT/NB10	60/MLFT/NF	60/MLFT/NPI	60/MLFT/NP7
60N 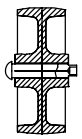	gr	209	209	234	248	245

	ITEM	60/MLFT/NdB8	60/MLFT/NdB10	60/MLFT/NdF	60/MLFT/NdPI	60/MLFT/NdP7
60Nd 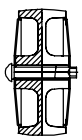	gr	231	231	256	270	267

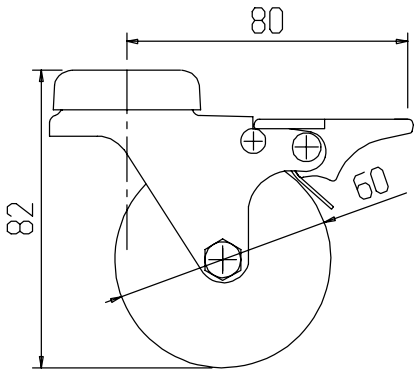

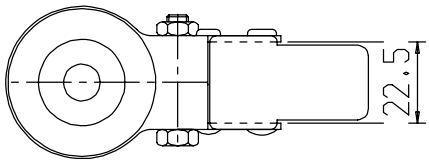

Supporti fissi Serie ML per i vari Diametri di Ruote e Gamma di Fissaggi
Fixed forks of the ML series for the various wheels diameters and fixings range

Materiale: Lamiera ferro EN 10130
Trattamanto superficiale:Zincatura passivata UNI ISO 2081
Material: Iron sheet subject to EN 10130
surface treatment:passivated galvanisation subject to UNI ISO 2081

daN S Portata statica conforme UNI EN 12527 *
daN S Static load capacity conform UNI EN 12527 *
gr=Peso per 1 pezzo gr=Weight for a piece

ITEM	50/ML/SF		60/ML/SF	
H	46		46	
E-F	6.2-6.2	6.2-8.2	6.2-6.2	6.2-8.2
daN S	-		-	
gr	77		85	

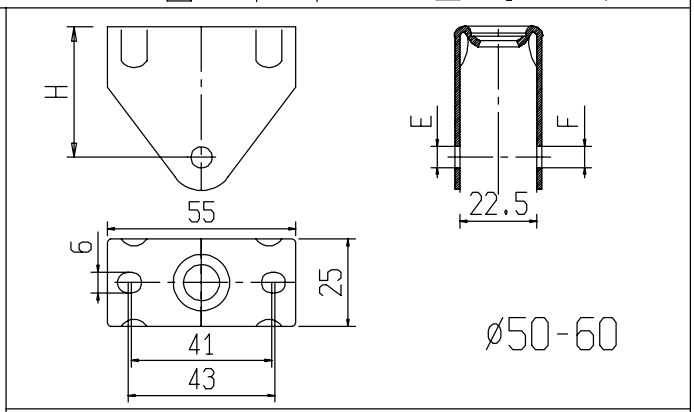

ITEM	50/ML/SFF		60/ML/SFF	
H	46		46	
E-F	6.2-6.2	6.2-8.2	6.2-6.2	6.2-8.2
daN S	-		-	
gr	98		106	

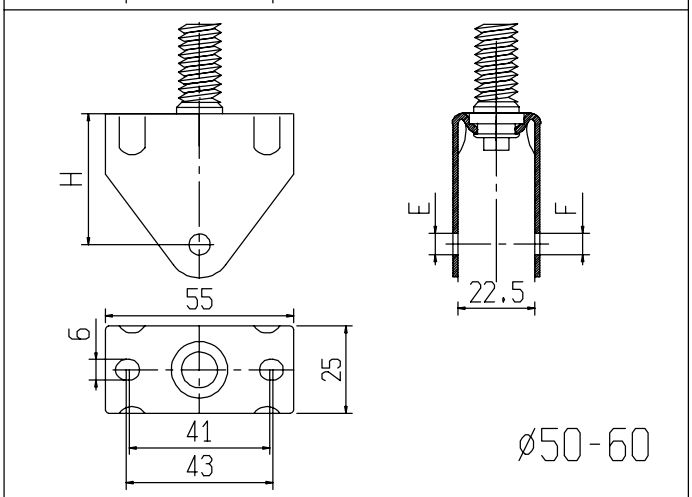

ITEM	50/ML/SFP5		60/ML/SFP5	
H	46		46	
E-F	6.2-6.2	6.2-8.2	6.2-6.2	6.2-8.2
daN S	-		-	
gr	123		131	

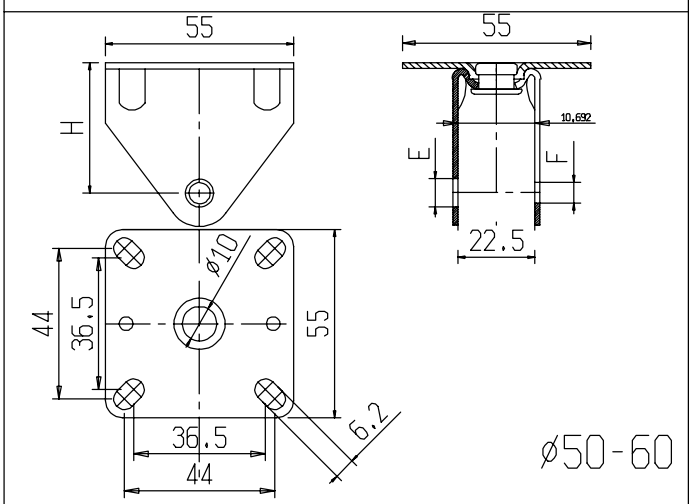

ITEM	50/ML/SFP5I	
H	46	
E-F	6.2-6.2	6.2-8.2
daN S	-	
gr	48	

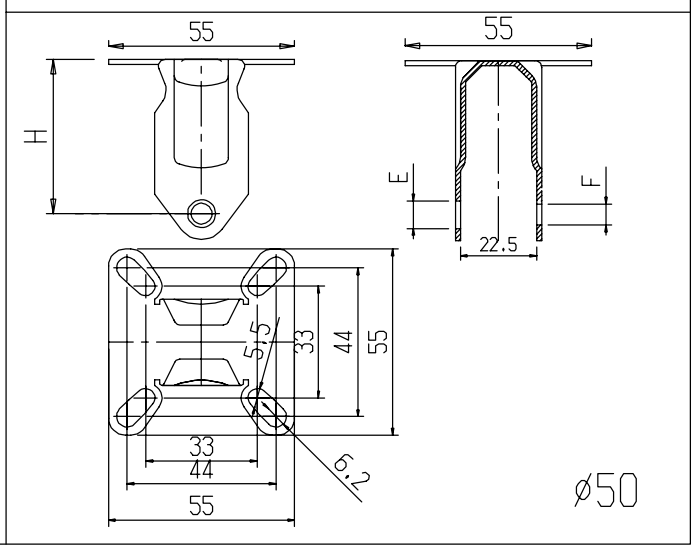

* La portata statica indicata per i soli supporti corrisponde a 1.5 portata dinamica verificata secondo UNI 12527 montando una ruota in Nylon

* The static load capacity mentioned for the only forks correspond to 1.5 dynamic load capacity checked according to UNI 12527 assembling with a nylon wheel

Complessivi fissi serie 50/ML/SF nelle varie tipologie di:Fissaggi,Ruote assemblati

Fixed castors of 50/ML/SF series with different type of: fixings, assembled wheels

Requisiti dei Complessivi assemblati alle varie Ruote

Requirements of the castors assembled with the different wheels

Portata Dinamica conforme UNI EN 12527 daN D
Dynamic load capacity conform UNI EN 12527

Portata Statica conforme UNI EN 12527 daN S
Static load capacity conform UNI EN 12527

gr = Peso per 1 pezzo

gr = Weight for a piece

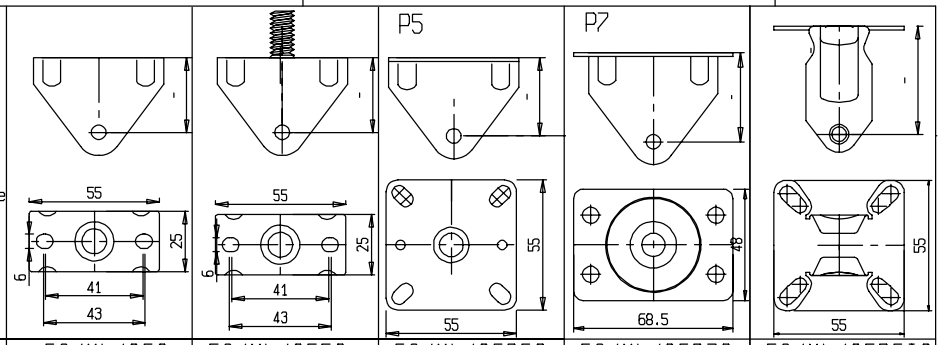

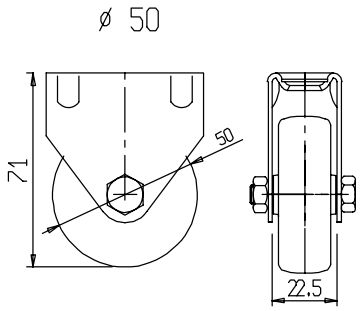

	ITEM	50/ML/SFG	50/ML/SFFG	50/ML/SFP5G	50/ML/SFP7G	50/ML/SFP5IG
50G	daN D	30	30	30	30	30
	daN S	45	45	45	45	45
	gr	136	157	182	-	107
	ITEM	50/ML/SFGd	50/ML/SFFGd	50/ML/SFP5Gd	50/ML/SFP7Gd	50/ML/SFP5IGd
50Gd	daN D	30	30	30	30	30
	daN S	45	45	45	45	45
	gr	140	161	186	-	111
	ITEM	50/ML/SFGCC	50/ML/SFFGCC	50/ML/SFP5GCC	50/ML/SFP7GCC	50/ML/SFP5IGCC
50GCC	daN D	40	40	40	40	40
	daN S	60	60	60	60	60
	gr	139	160	185	-	110
	ITEM	50/ML/SFGdA	50/ML/SFFGdA	50/ML/SFP5GdA	50/ML/SFP7GdA	50/ML/SFP5IGdA
50GdA	daN D	40	40	40	40	40
	daN S	60	60	60	60	60
	gr	-	-	-	-	-
	ITEM	50/ML/SFGcA	50/ML/SFFGcA	50/ML/SFP5GcA	50/ML/SFP7GcA	50/ML/SFP5IGcA
50GcA	daN D	40	40	40	40	40
	daN S	60	60	60	60	60
	gr	-	-	-	-	-
	ITEM	50/ML/SFPU	50/ML/SFFPU	50/ML/SFP5PU	50/ML/SFP7PU	50/ML/SFP5IPU
50PU	daN D	80	80	80	80	80
	daN S	120	120	120	120	120
	gr	123	144	169	-	94
	ITEM	50/ML/SFSR	50/ML/SFFSR	50/ML/SFP5SR	50/ML/SFP7SR	50/ML/SFP5ISR
50SR	daN D	30	30	30	30	30
	daN S	45	45	45	45	45
	gr	109	130	155	-	80
	ITEM	50/ML/SFSRd	50/ML/SFFSRd	50/ML/SFP5SRd	50/ML/SFP7Rd	50/ML/SFP5ISRd
50SRd	daN D	30	30	30	30	30
	daN S	45	45	45	45	45
	gr	118	139	164	-	89
	ITEM	50/ML/SFN	50/ML/SFFN	50/ML/SFP5N	50/ML/SFP7N	50/ML/SFP5IN
50N	daN D	60	60	60	60	60
	daN S	90	90	90	90	90
	gr	91	112	137	-	62
	ITEM	50/ML/SFNd	50/ML/SFFNd	50/ML/SFP5Nd	50/ML/SFP7Nd	50/ML/SFP5INd
50Nd	daN D	60	60	60	60	60
	daN S	90	90	90	90	90
	gr	118	139	164	-	89

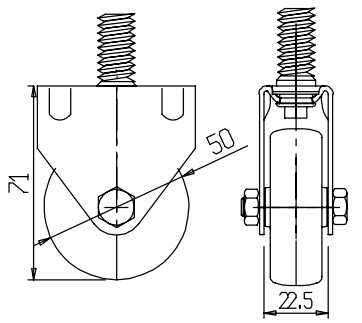

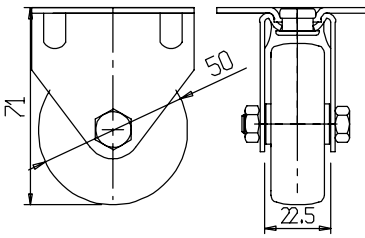

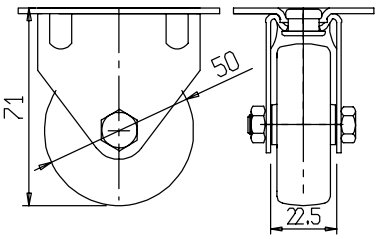

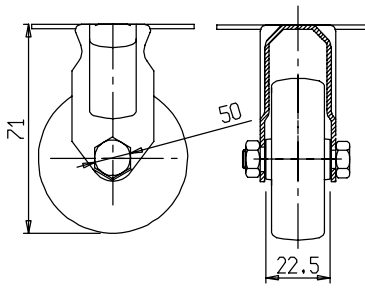

Complessivi fissi serie 60/ML/SF nelle varie tipologie di:Fissaggi,Ruote assemblati

Fixed castors of 60/ML/SF series with different types of: fixings, assembled wheels

Requisiti dei Complessivi assemblati alle varie Ruote
Requirements of the castors assembled with the different wheels

Portata Dinamica conforme UNI EN 12527 Dynamic load capacity conform UNI EN 12527 daN D	Portata Statica conforme UNI EN 12527 Static load capacity conform UNI EN 12527 daN S

gr = Peso per 1 pezzo
gr = Weight for a piece

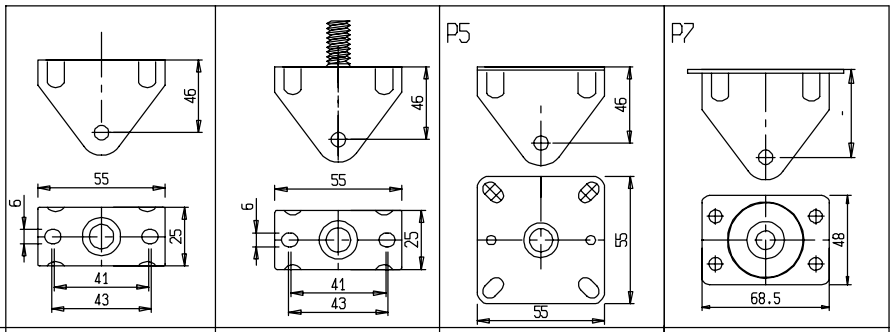

60G 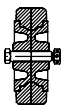	ITEM	60/ML/SFG	60/ML/SFFG	60/ML/SFP5G	60/ML/SFP7G
	H	80	80	82	82
	daN D	30	30	30	30
	daN S	45	45	45	45
	gr	161	182	207	-
60N 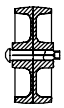	ITEM	60/ML/SFN	60/ML/SFFN	60/ML/SFP5N	60/ML/SFP7N
	H	80	80	82	82
	daN D	55	55	55	55
	daN S	82.5	82.5	82.5	82.5
	gr	122	143	168	-
60Nd 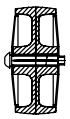	ITEM	60/ML/SFNd	60/ML/SFFNd	60/ML/SFP5Nd	60/ML/SFP7Nd
	H	80	80	82	82
	daN D	55	55	55	55
	daN S	82.5	82.5	82.5	82.5
	gr	144	165	190	-

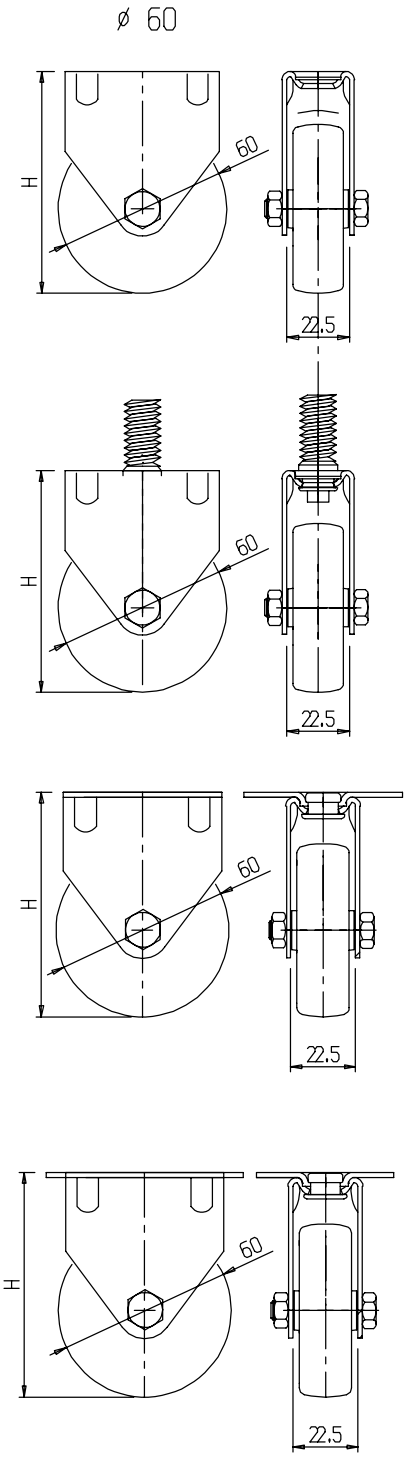

Requisiti Ruote Serie M nelle varie tipologie di diametri, battistrada, organi di rotolamento
Wheels Series M requirements in the various types of diameters, tyres, rolling parts

Ruota tipo / Wheel type	G	Gd	Gc- GCC	GdA	GcA	PU	SR	SRd		N	Nd
Catteristiche del Battistrada / Tyres characteristics	Gomma Grigia / Grey Rubber			Gomma Conduttiva Nera / Conductive Black rubber		Poliuretano Colore Arancio / Polyuretane Orange Color	Gomma Sintetica Grigia / Synthetic Grey rubber			Nylon Nero / Black Nylon	
Durezza del Battistrada conforme UNI EN 12527 / Tyres hardness in compliance with UNI EN 12527	shore A 76	76	76	85	85	85	78	78		>100	>100
Temperature di Utilizzo Raccomandate / Recommended working temperatures	Max= +70°C	+70°C	+70°C	+ 40°C	+ 40°C	+40°C	+60°C	+60°C		+40°C	+40°C
	Min= -30°C	-30°C	-30°C	-5°C	-5°C	-5 C	-10°C	-10°		0°C	0°C
Catteristiche del Nucleo / Wheel centre characteristics	Polipropilene Nero / Black Polypropylene		Nylon Nero / Black Nylon	Nylon Nero Conduttivo / Conductive Black Nylon		Nylon Bianco / White Nylon	Polipropilene Grigio / Grey Polypropylene				
Catteristiche del Mozzo / Hub characteristics	Foro Liscio / Plain bearing	Tubo Parafilo / Tube Threadguard	Cuscinetto a Sfera Parafilo / Ball Bearing Threadguard	Foro Liscio / Plain bearing	Cuscinetto a Sfera Parafilo / Ball Bearing Threadguard	Foro Liscio / Plain Bearing	Foro Liscio / Plain bearing	Tubo Parafilo / Tube Threadguard		Foro Liscio / Plain bearing	Tubo Parafilo / Tube Threadguard
Conducibilita'Elettrica conforme UNI EN 12527 / Electric conductivity in compliance with UNI EN 12527 hom Ω				< 10.000		gr = Peso per 1 pezzo / gr = Weight for a piece					

Portata Dinamica conforme UNI EN 12527 / Dynamic load capacity conform UNI EN 12527 — daN D — Resistenza al Rotolamento (FR) alla Portata Nominale / Rolling resistance (FR) at rated capacity — daN FR

Portata Statica conforme UNI EN 12527 / Static load capacity conform UNI EN 12527 — daN S — Resistenza al Superamento Ostacolo (FO) alla Portata Nominale H ostacolo=1% ø della Ruota Min 0.5 mm / Obstacle overcoming resistance (FO) at rated capacity obstacle H=1% of wheel, min. 0.5 mm — daN FO

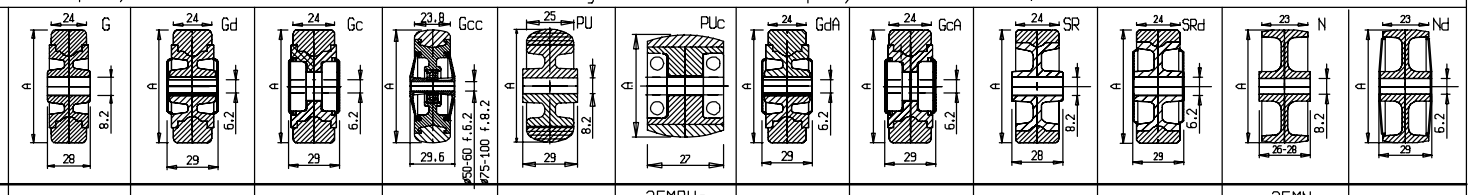

ITEM						35MPUc					35MN	
A						35					35	
daN D						100					60	
daN S						150					90	
daN FR						-					-	
daN FO						-					-	
gr						-					-	
ITEM	50MG	50MGd		50MGcc	50MPU		50MGdA	50MGcA	50MSR		50MN	50MNd
A	50	50		50	50		50	50	50		50	50
daN D	40	40		40	80		-	-	-		60	60
daN S	60	60		60	120		-	-	-		90	90
daN FR	2.4	2.4		2.4							1.4	1.4
daN FO	5.1	5.1		5.1				-	-		5.9	5.9
gr	44	55		57	-		71	97	-		30	40
ITEM	60MG	60MGd		60MGcc	60MPU		60MGdA	60MGcA	60MSR		60MN	60MNd
A	60	60		60	60		60	60	60		60	60
daN D	30	30		30	90		-	-	40		70	70
daN S	45	45		45	135		90	90	60		105	105
daN FR	2.2	2.2		2.2	-						0.8	0.8
daN FO	4.4	4.4		4.4	-			-			3.6	3.6
gr	61	72		81	59		96	126	38		34	54
ITEM	75MG	75MGd		75Gcc	75MPU		75MGdA	75MGcA	75MSR	75MSRd	75MN	75MNd
A	75	75		75	75		75	75	75	75	75	75
daN D	60	60		60	90		60	60	70	70	80	80
daN S	90	90		90	135		90	90	105	105	120	120
daN FR	3.2	3.2		-	-						0.7	0.7
daN FO	6.1	6.1		-	-			-		-	4.1	4.1
gr	86	111		113	86		137	170	62	80	43	71
ITEM	80MG	80MGd	80MGc				80MGdA	80MGcA	80MSR	80MSRd	80MN	80MNd
A	80	80	80				80	80	80	80	80	80
daN D	60	60	60				60	60	70	70	70	70
daN S	90	90	90				90	90	105	105	105	105
daN FR	2.7	2.7	2.7								0.7	0.7
daN FO	5.6	5.6	5.6					-		-	3.6	3.6
gr	114	139	187				154	187	65	83	50	78
ITEM	100MG	100MGd		100MGcc			100MGdA	100MGcA	100MSR	100MSRd	100MN	100MNd
A	100	100		100			100	100	100	100	100	100
daN D	60	60		60					80	80	70	70
daN S	90	90		90					120	120	105	105
daN FR	1.8	1.8		1.8							0.5	0.5
daN FO	5.5	5.5		5.5							3.6	3.6
gr	164	201		192			217	242	91	131	80	120
ITEM	125MG	125MGd										
A	125	125										
daN D	65	65										
daN S	100	100										
daN FR	1.8	1.8										
daN FO	5.8	5.8										
gr	278	330										

Assali,Cuscinetto e Parafili per Ruote Serie M

Axles,Bearings and Thread Guards for castors of the M series

Raccomandazione Adozione Assali per le varie tipologie di Ruote

Recommendation for the adoption of axles in the different types of wheels

M/G	M/Gd	M/Gc	M/GCC	M/PU	M/PUc	M/GdA	M/GcA	M/SR	M/SRd	M/N	M/Nd
ITEM 84 291	ITEM 85 291	ITEM 84 291	ITEM 85 291	ITEM 8084 291	ITEM 85 291	ITEM 84 291	ITEM 84 291	ITEM 84 291	ITEM 85 291	ITEM 82 -	ITEM 83 -
ITEM 82 -	ITEM 83 -	ITEM - -	ITEM 83 -	ITEM 8082 -		ITEM 82 -	ITEM - -	ITEM 82 -	ITEM 83 -	ITEM 84 291	ITEM 85 291
	ITEM 988 -	ITEM - -	ITEM - -			ITEM - -	ITEM - -	ITEM - -	ITEM 988 -	ITEM - -	ITEM 988 -

ITEM	84	ASSE VITE (631/RID)
gr	16	SCREW AXLE (631/RID)
	-	

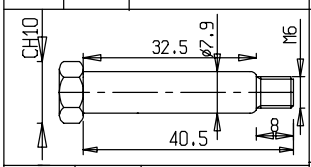

ITEM	85	ASSE VITE RID/M6x40
gr	11	SCREW AXLE RID/M6X40
	-	

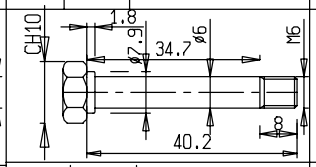

ITEM	291	M6
gr	2	M6
	-	

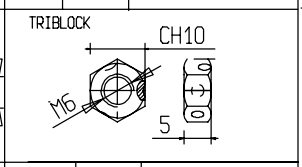

ITEM	598	CUSCINETTO M 8x22x15 a sfera
gr	15	BALL BEARING M 8x22x15
	-	

gr =Peso per 1 pezzo

gr =Weight for a piece

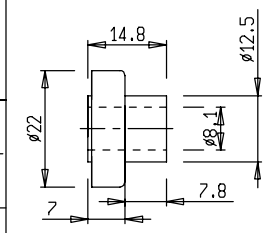

ITEM	82	ASSE RIB 24/ASR
gr	14	RIVETED AXLE 24/ASR
	-	

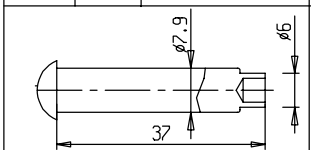

ITEM	83	ASSE RIB M6x40
gr	9	RIVETED AXLE M6x40
	-	

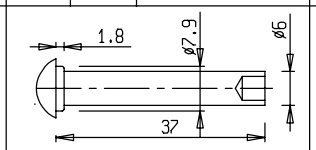

ITEM	988	TUBINO
gr	5	TUBE
	-	

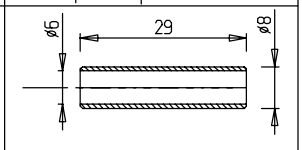

ITEM	gr		PARAFILI per RUOTE 50MGd
362	3	-	THREADGUARDS for WHEELS 50MGd

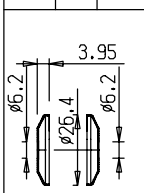

ITEM	gr		PARAFILI per RUOTE 60MGd
363	4	-	THREADGUARDS for WHEELS 60MGd

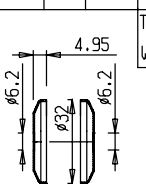

ITEM	gr		PARAFILI per RUOTE 75-80MGd
364	6	-	THREADGUARDS for WHEELS 75-80MGd

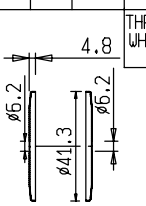

ITEM	gr		PARAFILI NYLON per RUOTA 75/MSRd
355	4	-	NYLON THREADGUARDS WHEELS 75/MSRd

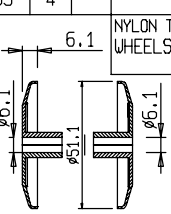

ITEM	gr		PARAFILI per RUOTE 100MGd
365	12	-	THREADGUARDS for WHEELS 100MGd

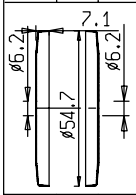

ITEM	gr		PARAFILI per RUOTE 100MGcA
405	12	-	THREADGUARDS for WHEELS 100MGcA
406	10	-	

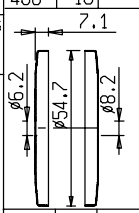

ITEM	gr		PARAFILI per RUOTE 50MGcA
391	2	-	THREADGUARDS for WHEELS 50MGcA
395	2	-	

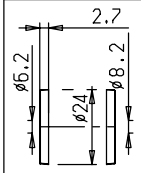

ITEM	gr		PARAFILI per RUOTE 60MGcA
391	2	-	THREADGUARDS for WHEELS 60MGcA
395	2	-	

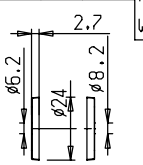

ITEM	gr		PARAFILI NYLON GRIS per RUOTE 75MGcc e 100MGcc
388	3		GREY NYLON THREADGUARD for WHEELS 75MGcc 100MGcc

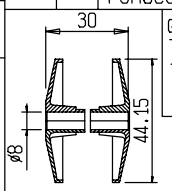

ITEM	gr		PARAFILI per RUOTE 100MSRd 100MNd
420	26	-	THREADGUARDS for WHEELS 100MSRd 100MNd

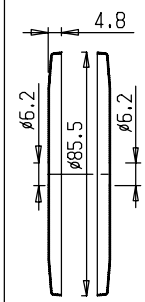

ITEM	gr		PARAFILI per RUOTE 80MGc 75/80MGcA
396	6	-	THREADGUARDS for WHEELS 80MGc 75/80MGcA
392	6	-	

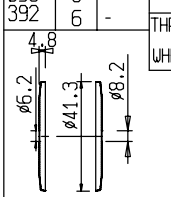

ITEM	gr		PARAFILI per RUOTE 125MGd
420	26	-	THREADGUARDS for WHEELS 125MGd

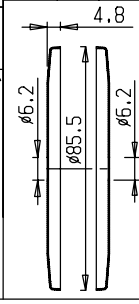

ITEM	gr		PARAFILI per RUOTE 50MNd
409	5	-	THREADGUARDS for WHEELS 50MNd

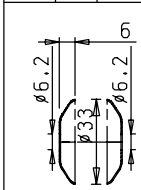

ITEM	gr		PARAFILI per RUOTE 60MNd
400	9	-	THREADGUARDS for WHEELS 60MNd

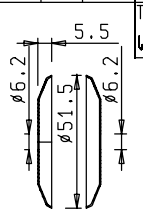

ITEM	gr		PARAFILI per RUOTE 75/80MNd
365	16	-	THREADGUARDS for WHEELS 75/80MNd

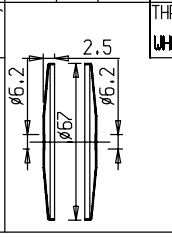

ITEM	gr		PARAFILI per RUOTE 80MSRd
400	9	-	THREADGUARDS for WHEELS 80MSRd

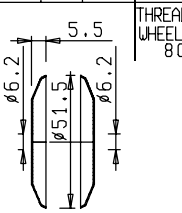

Gamma di Fissaggi Standard per Supporti Serie M MFT
Range of standard fixings for forks of the M and MFT series

A Foro Passante ø12.2
per Vite di Fissaggio Imbus M12x20
With bolt hole of ø 12.2 for
fixing screw IMBUS M12x20
(*)
Rondella di appoggio a richiesta
supporting washer on request

A Foro Passante ø9
per Vite di Fissaggio Imbus M8x25
(*)
With bolt hole of ø 9 for
fixing screw IMBUS M8x25
(*)

A Foro Passante ø10.2
per Vite di Fissaggio Imbus 10x25
(*)
With bolt hole of ø 10.2 for
fixing screw IMBUS 10x25
(*)

A Perno Filettato Rivettato eo Vite Imbus fissata
Dimensioni da tabella da Specificare sempre all' Ordine
With riveted thread stem,and/or fixed Imbus screw
dimensions as per table to be specified when placing order

A Codolo Liscio Rivettato,
dimensioni a richiesta.
With smooth riveted stem,
dimensions on request.

O

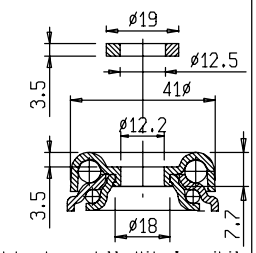

* Lunghezza della Vite Inseribile con Ruota Assemblata
* Length of screw that can be inserted with assembled wheel

B8 FORNIBILE SU RICHIESTA
AVAILABLE ON REQUEST

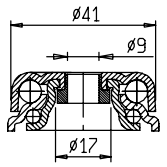

* Lunghezza della Vite Inseribile con Ruota Assemblata
* Length of screw that can be inserted with assembled wheel

B10

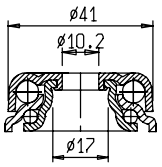

* Lunghezza della Vite Inseribile con Ruota Assemblata
* Length of screw that can be inserted with assembled wheel

F

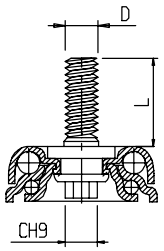

D	M10	M12
L	15-20-25-30	15-25

F

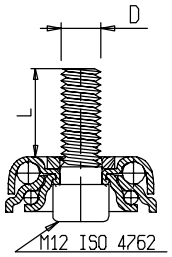

D	M12
L	9-13-18-23-28-33-38-43-53

C

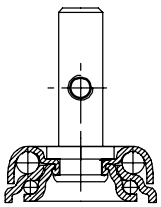

Fissaggio a Piastra Integrale P1 60X60
Integral plate fixing P1 60x60

PI

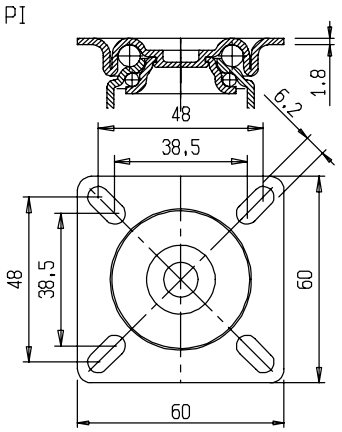

Diverse Asolature sono Eseguibili,
Inscritte nel Perimetro Esterno
Possibility of various slots
made in the external perimeter

Fissaggio a Piastra Integrale P3 77x67
Integral plate fixing P3 77x67

P3

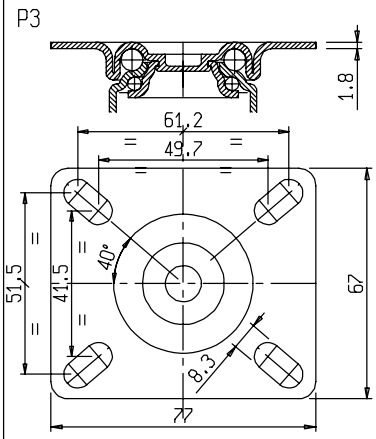

Diverse Asolature sono Eseguibili,
Inscritte nel Perimetro Esterno
Possibility of various slots
made in the external perimeter

Fissaggio a Piastra Integrale P7 68.5x48
Integral plate fixing P7 68.5x48

P7

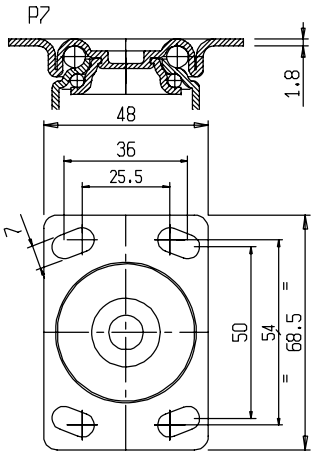

Diverse Asolature sono Eseguibili,
Inscritte nel Perimetro Esterno
Possibility of various slots
made in the external perimeter

Fissaggio a Piastra Integrale P6 92x65
Integral plate fixing P6 92x65

P6

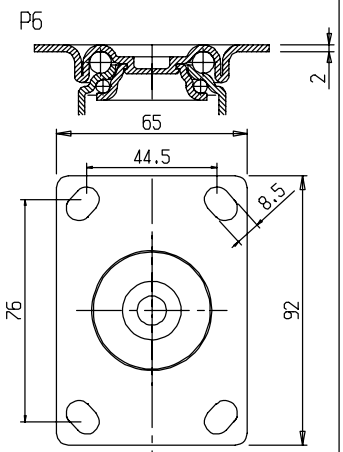

Diverse Asolature sono Eseguibili,
Inscritte nel Perimetro Esterno
Possibility of various slots
made in the external perimeter

Fissaggio ad Espansore in Gomma per Tubo Tondo
le Dimensioni del Gommino Disponibili vedi Tabella
Rubber expander fixing for round tube, see
table for the available expander dimensions

E

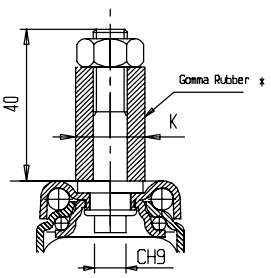

* sono Eseguibili Gommini Conduttivi
* Conductive rubber expander can also be made.

K	18	19	22	25	28

K=Diametro Interno del Tubo
da Specificare sempre all Ordine
K=Inside diameter of the tube always to be
specified when placing order

Fissaggio ad Espansori in Gomma per Tubo Tondo e Quadro
Dimensioni dei Gommini Disponibili vedi Tabella
Rubber expander fixing for round and square tube,
see table for available dimensions of rubber expanders

EL

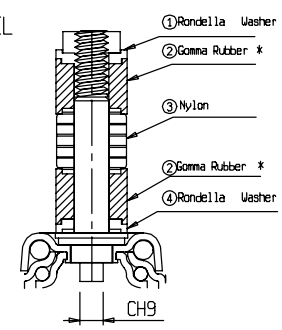

* sono Eseguibili Gommini Conduttivi
* Conductive rubber expander can also be made.

Ø	18	19	22	25	28
⊠	21	26	31		

Ø , ⊠ Dimensioni Interne del Tubo
da Specificare sempre all Ordine
Ø , ⊠ Inside dimensions of tube always to be
specified when placing order

Fissaggio con SET EL (*)
Fixing with EL SET (*)

(*) i Componenti (1 2 3 4) sono fornibili
in Bustine da 1 SET
(*) Components (1, 2, 3 and 4)are available
in packets of 1 set

SET EL

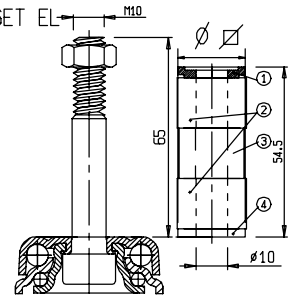

Si Raccomanda di Adottare:
Supporto B10 +
Vite Imbus M10x65+Dado +
SET EL (1 2 3 4)

You are recommended to use
housing type B10+screw
IMBUS M10X65 + NUT +
SET EL (1, 2, 3, 4)

ITEM	1904	1905	1906	1901	1907
SET EL	ø18	ø19	ø22	ø25	ø28
	–	–	–	–	–
ITEM	1908	1902	1903		
SET EL	ø21	ø26	ø31		
	–	–	–		

Fissaggio ad Angolare A2 A3
Angular fixing A2 A3

A2

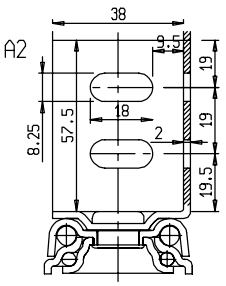

A3

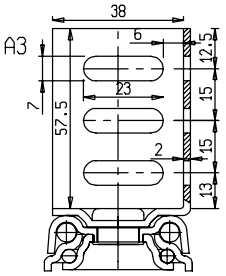

Supporti girevoli Serie M per i vari diametri di ruote e gamma di fissaggi

Swivel forks M Series for the various wheels diameters and range of fixings

Materiale: Lamiera ferro secondo standard EN 10130
Trattamanto superficiale Zincatura passivata UNI ISO 2081
Corona sfere superiore: n. 14 sfere 1/4" ingrassate
Corona sfere inferiore: n. 22 sfere 5/32" ingrassate
Material: Iron sheet EN 10130
Surface treatment passivated galvanisation subject to UNI ISO 2081
Upper ball crown N. 14 greased balls 1/4
Lower ball crown N. 22 greased ball 5/32

daN S Portata Statica conforme UNI EN 12527 *

daN S Static load capacity conform UNI EN 12527 *

gr = Peso per 1 pezzo

gr = Weight for a piece

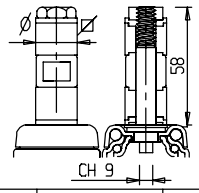

	Ø	18	19	22	25	28
EL+		-	-	-	-	-
	Ø	21	26	31	-	-
EL+		-	-	-	-	-

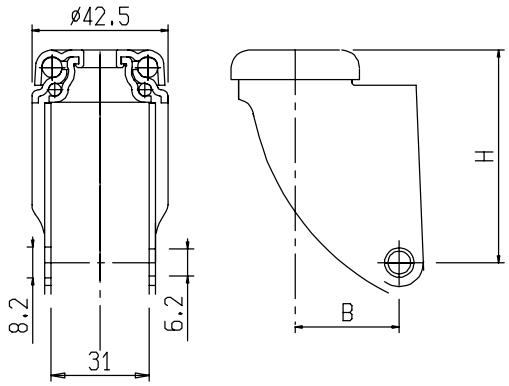

ITEM	gr
123	5

0 Rondella Washer

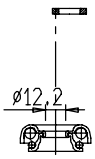

B10 Ø10.2 a richiesta On request B8 Ø9

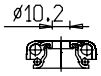

F

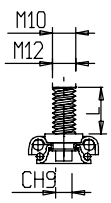

PI 60x60

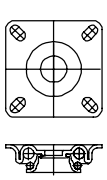

P3 77x67

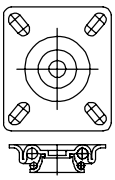

P7 68.5x48

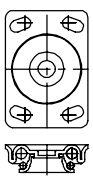

P6 92x65

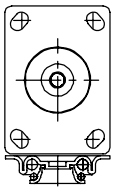

E

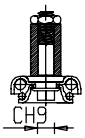

EL+ Espansori Expanders

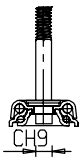

A2

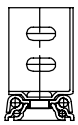

A3

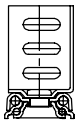

ITEM	35/M/0	35/M/B10	35/M/F	35/M/PI		35/M/P7		35/M/E		35/M/A2	35/M/A3
H	35.3	35.3	35.3	35.3		35.3		35.3		35.3	35.3
B	17	17	17	17		17		17		17	17
daN S	-	-	-	-		-		-		-	-
gr	-	110	-	-		-		-		-	-
ITEM	50/M/0	50/M/B10	50/M/F	50/M/PI	50/M/P3	50/M/P7	50/M/P6	50/M/E	50/M/EL	50/M/A2	50/M/A3
H	47	47	47	47	47	47	47	47	47	47	47
B	22.5	22.5	22.5	22.5	22.5	22.5	22.5	22.5	22.5	22.5	22.5
daN S	45	45	45	45	45	45	45	45	45	45	45
gr	123	128	153	155	171	152	198	177	187	213	223
ITEM	60/M/0	60/M/B10	60/M/F	60/M/PI	60/M/P3	60/M/P7	60/M/P6	60/M/E	60/M/EL	60/M/A2	60/M/A3
H	52.5	52.5	52.5	52.5	52.5	52.5	52.5	52.5	52.5	52.5	52.5
B	20.5	20.5	20.5	20.5	20.5	20.5	20.5	20.5	20.5	20.5	20.5
daN S	75	75	75	75	75	75	75	75	75	75	75
gr	130	136	161	163	179	160	206	184	194	205	215
ITEM	75-80/M/0	75-80/M/B10	75-80/M/F	75-80/M/PI	75-80/M/P3	75-80/M/P7	75-80/M/P6	75-80/M/E	75-80/M/EL	75-80/M/A2	75-80/M/A3
H	63.5	63.5	63.5	63.5	63.5	63.5	63.5	63.5	63.5	63.5	63.5
B	30	30	30	30	30	30	30	30	30	30	30
daN S	30	30	30	30	30	30	30	30	30	30	30
gr	159	162	187	200	216	197	243	213	223	244	247
ITEM	100/M/0	100/M/B10	100/M/F	100/M/PI	100/M/P3	100/M/P7	100/M/P6	100/M/E	100/M/EL	100/M/A2	100/M/A3
H	72.5	72.5	72.5	72.5	72.5	72.5	72.5	72.5	72.5	72.5	72.5
B	32.6	32.6	32.6	32.6	32.6	32.6	32.6	32.6	32.6	32.6	32.6
daN S	30	30	30	30	30	30	30	30	30	30	30
gr	168	174	199	204	220	201	247	225	235	253	256
ITEM	125/M/0	125/M/B10	125/M/F	125/M/PI	125/M/P3	125/M/P7	125/M/P6	125/M/E	125/M/EL	125/M/A2	125/M/A3
H	87.5	87.5	87.5	87.5	87.5	87.5	87.5	87.5	87.5	87.5	87.5
B	34.5	34.5	34.5	34.5	34.5	34.5	34.5	34.5	34.5	34.5	34.5
daN S	-	-	-	-	-	-	-	-	-	-	-
gr	204	210	235	239	255	236	282	261	271	285	288

* La portata statica indicata per i soli supporti corrisponde a 1.5 portata dinamica verificata secondo UNI 12527 montando una ruota in Nylon

* The static load capacity mentioned for the only forks correspond to 1.5 of dynamic load capacity checked accoding to UNI 12527 assembling with a nylon wheel

Supporti girevoli con freno Serie MFT per i vari diametri di ruote e gamma di fissaggi
Swivel forks with brake MFT Series for the various wheels diameters and range of fixings

Materiale: Lamiera ferro secondo standard EN 10130
Trattamanto superficiale Zincatura passivata UNI ISO 2081
Corona sfere superiore: n. 14 sfere 1/4" ingrassate
Corona sfere inferiore: n. 22 sfere 5/32" ingrassate
Material: Iron sheet EN 10130
Surface treatment passivated galvanisation subject to UNI ISO 2081
Upper ball crown N. 14 greased balls 1/4
Lower ball crown N. 22 greased ball 5/32

daN S Portata Statica conforme UNI EN 12527 *
daN S Static load capacity conform UNI EN 12527 *

gr = Peso per 1 pezzo
gr = Weight for a piece

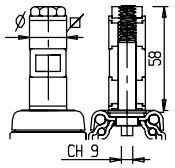

	ø	18	19	22	25	28
EL+		-	-	-	-	-
	⌀	21	26	31	-	-
EL+		-	-	-	-	-

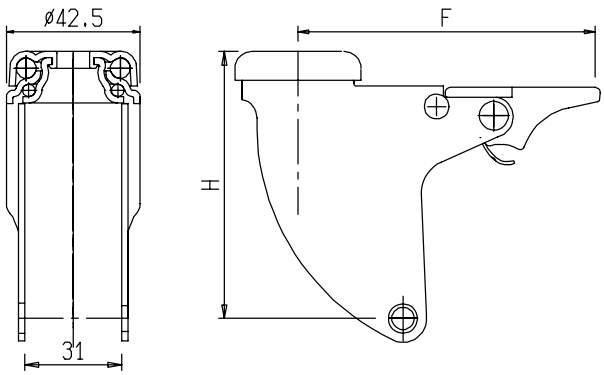

ITEM	gr 5	O Rondella Washer	B10 ø10.2 a richiesta on request B8 ø9	F M10 M12	PI 60x60	P3 77x67	P7 68.5x48	P6 92x65	E	EL+ Espansori Expanders	A2	A3
123		ø12.2	ø10.2	CH9					CH9	CH9		

ITEM	35/MF/O	35/MF/B10	35/MF/F	35/MF/PI		35/MF/P7		35/MF/E		35/MF/A2	35/MF/A3
H	35.3	35.3	35.3	35.3		35.3		35.3		35.3	35.3
F	69.3	69.3	69.3	69.3		69.3		69.3		69.3	69.3
daN S	-	-	-	-		-		-		-	-
gr	152	120	-	-		-		-		-	-
ITEM	50/MFT/O	50/MFT/B10	50/MFT/F	50/MFT/PI	50/MFT/P3	50/MFT/P7	50/MFT/P6	50/MFT/E	50/MFT/EL	50/MFT/A2	50/MFT/A3
H	47	47	47	47	47	47	47	47	47	47	47
F	80	80	80	80	80	80	80	80	80	80	80
daN S	45	45	45	45	45	45	45	45	45	45	45
gr	175	178	210	200	216	197	243	234	244	250	254
ITEM	60/MFT/O	60/MFT/B10	60/MFT/F	60/MFT/PI	60/MFT/P3	60/MFT/P7	60/MFT/P6	60/MFT/E	60/MFT/EL	60/MFT/A2	60/MFT/A3
H	52.5	52.5	52.5	52.5	52.5	52.5	52.5	52.5	52.5	52.5	52.5
F	81.5	81.5	81.5	81.5	81.5	81.5	81.5	81.5	81.5	81.5	81.5
daN S	75	75	75	75	75	75	75	75	75	75	75
gr	177	186	218	209	225	206	252	231	241	252	256
ITEM	75/MFT/O	75/MFT/B10	75/MFT/F	75/MFT/PI	75/MFT/P3	75/MFT/P7	75/MFT/P6	75/MFT/E	75/MFT/EL	75/MFT/A2	75/MFT/A3
H	63.5	63.5	63.5	63.5	63.5	63.5	63.5	63.5	63.5	63.5	63.5
F	90.5	90.5	90.5	90.5	90.5	90.5	90.5	90.5	90.5	90.5	90.5
daN S	30	30	30	30	30	30	30	30	30	30	30
gr	221	228	260	250	266	247	293	228	238	296	300
ITEM	80/MFT/O	80/MFT/B10	80/MFT/F	80/MFT/PI	80/MFT/P3	80/MFT/P7	80/MFT/P6	80/MFT/E	80/MFT/EL	80/MFT/A2	80/MFT/A3
H	63.5	63.5	63.5	63.5	63.5	63.5	63.5	63.5	63.5	63.5	63.5
F	90.5	90.5	90.5	90.5	90.5	90.5	90.5	90.5	90.5	90.5	90.5
daN S	30	30	30	30	30	30	30	30	30	30	30
gr	221	228	260	250	266	247	293	228	238	296	300
ITEM	100/MFT/O	100/MFT/B10	100/MFT/F	100/MFT/PI	100/MFT/P3	100/MFT/P7	100/MFT/P6	100/MFT/E	100/MFT/EL	100/MFT/A2	100/MFT/A3
H	72.5	72.5	72.5	72.5	72.5	72.5	72.5	72.5	72.5	72.5	72.5
F	96	96	96	96	96	96	96	96	96	96	96
daN S	30	30	30	30	30	30	30	30	30	30	30
gr	245	244	276	270	286	267	313	299	309	352	356
ITEM	125/MFT/O	125/MFT/B10	125/MFT/F	125/MFT/PI	125/MFT/P3	125/MFT/P7	125/MFT/P6	125/MFT/E	125/MFT/EL	125/MFT/A2	125/MFT/A3
H	87.5	87.5	87.5	87.5	87.5	87.5	87.5	87.5	87.5	87.5	87.5
F	100	100	100	100	100	100	100	100	100	100	100
daN S	-	-	-	-	-	-	-	-	-	-	-
gr	281	288	320	320	336	317	363	343	353	396	400

Complessivi girevoli Serie 35/M e 50/M nelle varie tipologie di fissaggi, ruote assemblate

Swivel castors 35/M and 50/M Series in the different types of fixings, assembled wheels

Requisiti dei complessivi assemblati alle varie ruote Requirements of the castors assembled with the different wheels		PUc	N
Portata Dinamica conforme UNI EN 12527 Dynamic load capacity conform UNI EN 12527	daN D	100	70
Portata Statica conforme UNI EN 12527 Static load capacity conform UNI EN 12527	daN S	150	105

		G	Gd	Gcc	PU	GdA	GcA	SR	N	Nd
ø 35	daN D	50	50	50	80	40	40	-	30	30
	daN S	75	75	75	120	60	60	-	45	45
ø 50	daN D	50	50	50	80	40	40	-	30	30
	daN S	75	75	75	120	60	60	-	45	45

Conducibilita'Elettrica conforme UNI EN 12527 Electric conductivity in compliance with UNI EN 12527	Ω hom					<10.000

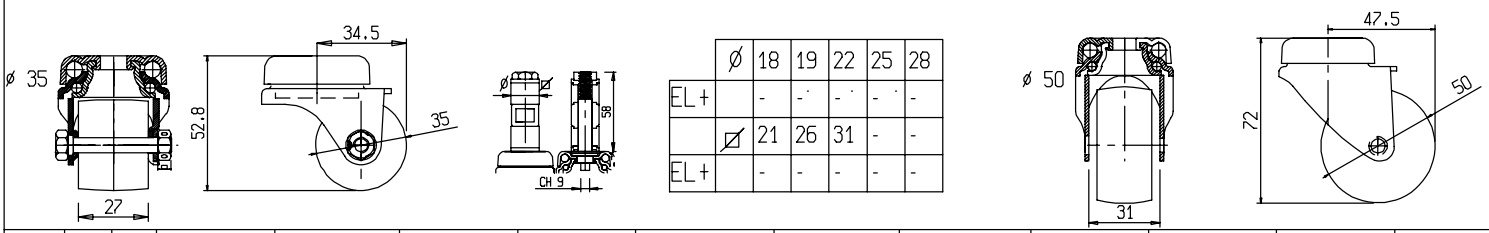

	ø	18	19	22	25	28
EL +		-	-	-	-	-
	⌀	21	26	31	-	-
EL +		-	-	-	-	-

ITEM	gr	
123	-	-

gr = Peso per 1 pezzo
gr = Weight for a piece

O Rondella Washer — ø12.2

B10 ø10.2 a richiesta on request — B8 ø9 — ø10.2

F — M10 — M12 — CH9 — ITEM

PI 60x60 — P3 77x67 — P7 68.5x48 — P6 92x65 — E — CH9 — EL Espansori Expanders — CH9 — A2 — A3

35PUc	ITEM	35/M/PUcO	35/M/PUcB10	35/M/PUcF	35/M/PUcPI		35/M/PUcP7		35/M/PUcE		35/M/PUcA2	35/M/PUcA3
	gr	-	-	-	-		-		-		-	-
35N	ITEM	35/M/NO	35/M/NB10	35/M/NF	35/M/NPI		35/M/NP7		35/M/NE		35/M/NA2	35/M/NA3
	gr	-	-	-	-		-		-		-	-
50G	ITEM	50/M/GO	50/M/GB10	50/M/GF	50/M/GPI	50/M/GP3	50/M/GP7	50/M/GP6	50/M/GE	50/M/GEL	50/M/GA2	50/M/GA3
	gr	186	186	216	220	236	217	263	240	258	276	255
50Gd	ITEM	50/M/GdO	50/M/GdB10	50/M/GdF	50/M/GdPI	50/M/GdP3	50/M/GdP7	50/M/GdP6	50/M/GdE	50/M/GdEL	50/M/GdA2	50/M/GdA3
	gr	190	196	220	222	238	219	265	244	262	281	259
50Gcc	ITEM	50/M/GccO	50/M/GccB10	50/M/GccF	50/M/GccPI	50/M/GccP3	50/M/GccP7	50/M/GccP6	50/M/GccE	50/M/GccEL	50/M/GccA2	50/M/GccA3
	gr	199	204	229	232	248	229	275	253	271	289	268
50PU	ITEM	50/M/PUO	50/M/PUB10	50/M/PUF	50/M/PUPI	50/M/PUP3	50/M/PUP7	50/M/PUP6	50/M/PUE	50/M/PUEL	50/M/PUA2	50/M/PUA3
	gr	-	-	-	-	-	-	-	-	- -	-	-
50GdA	ITEM	50/M/GdAO	50/M/GdAB10	50/M/GdAF	50/M/GdAPI	50/M/GdAP3	50/M/GdAP7	50/M/GdAP6	50/M/GdAE		50/M/GdAA2	50/M/GdAA3
	gr	206	212	236	238	254	235	281	260		297	275
50GcA	ITEM	50/M/GcAO	50/M/GcAB10	50/M/GcAF	50/M/GcAPI	50/M/GcAP3	50/M/GcAP7	50/M/GcAP6	50/M/GcAE		50/M/GcAA2	50/M/GcAA3
	gr	239	244	269	272	288	269	315	293		329	308
50SR	ITEM	50/M/SRO	50/M/SRB10	50/M/SRF	50/M/SRPI	50/M/SRP3	50/M/SRP7	50/M/SRP6	50/M/SRE	50/M/SREL	50/M/SRA2	50/M/SRA3
	gr	-	-	-	-	-	-	-	-	-	-	-
50N	ITEM	50/M/NO	50/M/NB10	50/M/NF	50/M/NPI	50/M/NP3	50/M/NP7	50/M/NP6	50/M/NE	50/M/NEL	50/M/NA2	50/M/NA3
	gr	167	173	197	199	215	196	242	221	239	242	246
50Nd	ITEM	50/M/NdO	50/M/NdB10	50/M/NdF	50/M/NdPI	50/M/NdP3	50/M/NdP7	50/M/NdP6	50/M/NdE	50/M/NdEL	50/M/NdA2	50/M/NdA3
	gr	182	188	206	208	224	205	251	234	252	270	274

Complessivi girevoli Serie 60/M nelle varie tipologie di fissaggi, ruote assemblate

Swivel castors 60/M Series in the different types of fixings, assembled wheels

Requisiti dei Complessivi assemblati alle varie Ruote Requirements of the castors assembled with the different wheels		G	Gd	Gcc	PU	GdA	GcA	SR	SRd	N	Nd
Portata Dinamica conforme UNI EN 12527 Dynamic load capacity conform UNI EN 12527	D	60	60	60	80	-	-	60	-	50	50
Portata Statica conforme UNI EN 12527 Static load capacity conform UNI EN 12527	S	90	90	90	120	-	-	90	-	75	75
Conducibilita'Elettrica conforme UNI EN 12527 Electric conductivity in compliance with UNI EN 12527	Ω hom					<10.000					

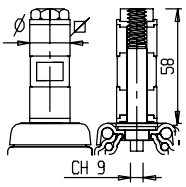

	Ø	18	19	22	25	28
EL+		-	-	-	-	-
	⌀	21	26	31	-	-
EL+		-	-	-	-	-

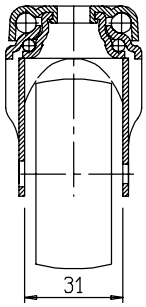

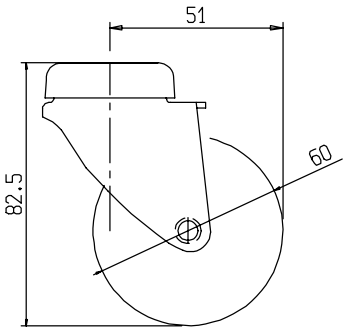

ITEM	gr	€
8123	5	-

gr = Peso per 1 pezzo

gr = Weight for a piece

	Rondella Washer	B10 ø10.2 a Richiesta On request B8 ø9	F	PI 60x60	P3 77x67	P7 68.5x48	P6 92x65	E	EL +Espansori Expanders	C	A2	A3
	O ø12.2	ø10.2	M10 M12 CH9					CH9	CH9			

	ITEM	60/M/G0	60/M/GB10	60/M/GF	60/M/GPI	60/M/GP3	60/M/GP7	60/M/GP6	60/M/GE	60/M/GEL	60/M/GC	60/M/GA2	60/M/GA3
60G	gr	210	216	241	239	255	236	282	264	282	273	300	304
60Gd	ITEM	60/M/Gd0	60/M/GdB10	60/M/GdF	60/M/GdPI	60/M/GdP3	60/M/GdP7	60/M/GdP6	60/M/GdE	60/M/GdEL	60/M/GdC	60/M/GdA2	60/M/GdA3
	gr	214	220	245	245	261	242	288	268	286	277	304	308
60Gcc	ITEM	60/M/Gcc0	60/M/GccB10	60/M/GccF	60/M/GccPI	60/M/GccP3	60/M/GccP7	60/M/GccP6	60/M/GccE	60/M/GccEL	60/M/GccC	60/M/GccA2	60/M/GccA3
	gr	230	235	260	262	278	259	305	283	301	293	320	324
60PU	ITEM	60/M/PU0	60/M/PUB10	60/M/PUF	60/M/PUPI	60/M/PUP3	60/M/PUP7	60/M/PUP6	60/M/PUE	60/M/PUEL	60/M/PUC	60/M/PUA2	60/M/PUA3
	gr	203	209	233	236	252	233	279	256	274	266	277	297
60GdA	ITEM	60/M/GdA0	60/M/GdAB10	60/M/GdAF	60/M/GdAPI	60/M/GdAP3	60/M/GdAP7	60/M/GdAP6	60/M/GdAE			60/M/GdAA2	60/M/GdAA3
	gr	238	244	269	269	285	266	312	292			328	327
60GcA	ITEM	60/M/GcA0	60/M/GcAB10	60/M/GcAF	60/M/GcAPI	60/M/GcAP3	60/M/GcAP7	60/M/GcAP6	60/M/GcAE			60/M/GcAA2	60/M/GcAA3
	gr	275	280	305	307	323	304	350	328			365	369
60SR	ITEM	60/M/SR0	60/M/SRB10	60/M/SRF	60/M/SRPI	60/M/SRP3	60/M/SRP7	60/M/SRP6	60/M/SRE	60/M/SREL	60/M/SRC	60/M/SRA2	60/M/SRA3
	gr	182	188	212	215	231	212	258	235	253	245	256	260
60N	ITEM	60/M/N0	60/M/NB10	60/M/NF	60/M/NPI	60/M/NP3	60/M/NP7	60/M/NP6	60/M/NE	60/M/NEL	60/M/NC	60/M/NA2	60/M/NA3
	gr	179	185	209	212	228	209	255	232	250	242	253	257
60Nd	ITEM	60/M/Nd0	60/M/NdB10	60/M/NdF	60/M/NdPI	60/M/NdP3	60/M/NdP7	60/M/NdP6	60/M/NdE	60/M/NdEL	60/M/NdC	60/M/NdA2	60/M/NdA3
	gr	198	204	229	235	251	232	278	251	269	261	288	292

Complessivi girevoli Serie 75/M nelle varie tipologie di fissaggi, ruote assemblate
Swivel castors 75/M Series in the different types of fixings, assembled wheels

Requisiti dei Complessivi assemblati alle varie Ruote Requirements of the castors assembled with the different wheels		G	Gd	Gcc	PU	GdA	GcA	SR	SRd	N	Nd
Portata Dinamica conforme UNI EN 12527 Dynamic load capacity conform UNI EN 12527	daN D	60	60	60	60	50	50	70	70	30	30
Portata Statica conforme UNI EN 12527 Static load capacity conform UNI EN 12527	daN S	90	90	90	90	75	75	105	105	45	45
Conducibilita'Elettrica conforme UNI EN 12527 Electric conductivity in compliance with UNI EN 12527	Ω hom					< 10.000					

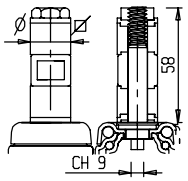

	Ø	18	19	22	25	28
EL +		-	-	-	-	-
	⌀	21	26	31	-	-
EL +		-	-	-	-	-

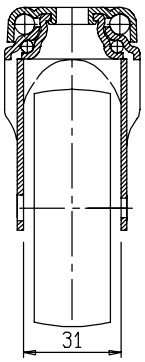

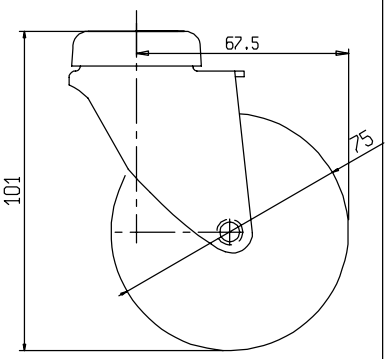

ITEM	gr	
8123	5	-

gr = Peso per 1 pezzo
gr = Weight for a piece

	Rondella Washer 0	B10 ø10.2 a Richiesta On request B8 ø9	F	PI 60x60	P3 77x67	P7 68.5x48	P6 92x65	E	EL + Espansori Expanders	C	A2	A3
	ø12.2	ø10.2	M10 M12 L CH9					CH9	CH9			

75G	ITEM	75/M/G0	75/M/GB10	75/M/GF	75/M/GPI	75/M/GP3	75/M/GP7	75/M/GP6	75/M/GE	75/M/GEL	75/M/GC	75/M/GA2	75/M/GA3
	gr	264	267	292	293	309	290	336	318	336	327	355	359
75Gd	ITEM	75/M/Gd0	75/M/GdB10	75/M/GdF	75/M/GdPI	75/M/GdP3	75/M/GdP7	75/M/GdP6	75/M/GdE	75/M/GdEL	75/M/GdC	75/M/GdA2	75/M/GdA3
	gr	282	285	345	353	369	350	396	371	389	345	407	411
75Gcc	ITEM	75/M/Gcc0	75/M/GccB10	75/M/GccF	75/M/GccPI	75/M/GccP3	75/M/GccP7	75/M/GccP6	75/M/GccE	75/M/GccEL	75/M/GccC	75/M/GccA2	75/M/GccA3
	gr	279	282	272	280	296	277	323	298	316	342	335	339
75PU	ITEM	75/M/PU0	75/M/PUB10	75/M/PUF	75/M/PUPI	75/M/PUP3	75/M/PUP7	75/M/PUP6	75/M/PUE	75/M/PUEL	75/M/PUC	75/M/PUA2	75/M/PUA3
	gr	258	261	286	300	316	297	343	312	330	321	348	352
75GdA	ITEM	75/M/GdA0	75/M/GdAB10	75/M/GdAF	75/M/GdAPI	75/M/GdAP3	75/M/GdAP7	75/M/GAP6	75/M/GdAE			75/M/GdAA2	75/M/GdAA3
	gr	313	316	376	384	400	381	427	402			438	442
75GcA	ITEM	75/M/GcA0	75/M/GcAB10	75/M/GcAF	75/M/GcAPI	75/M/GcAP3	75/M/GcAP7	75/M/GcAP6	75/M/GcAE			75/M/GcAA2	75/M/GcAA3
	gr	348	351	341	349	365	346	392	367			404	408
75SR	ITEM	75/M/SR0	75/M/SRB10	75/M/SRF	75/M/SRPI	75/M/SRP3	75/M/SRP7	75/M/SRP6	75/M/SRE	75/M/SREL	75/M/SRC	75/M/SRA2	75/M/SRA3
	gr	240	243	268	276	292	273	319	294	312	303	331	335
75SRd	ITEM	75/M/SRd0	75/M/SRdB10	75/M/SRdF	75/M/SRdPI	75/M/SRdP3	75/M/SRdP7	75/M/SRdP6	75/M/SRdE	75/M/SRdEL	75/M/SRdC	75/M/SRdA2	75/M/SRdA3
	gr	277	280	305	313	329	310	356	331	349	340	368	372
75N	ITEM	75/M/N0	75/M/NB10	75/M/NF	75/M/NPI	75/M/NP3	75/M/NP7	75/M/NP6	75/M/NE	75/M/NEL	75/M/NC	75/M/NA2	75/M/NA3
	gr	216	219	244	258	274	255	301	270	288	279	306	310
75Nd	ITEM	75/M/Nd0	75/M/NdB10	75/M/NdF	75/M/NdPI	75/M/NdP3	75/M/NdP7	75/M/NdP6	75/M/NdE	75/M/NdEL	75/M/NdC	75/M/NdA2	75/M/NdA3
	gr	244	247	272	287	303	284	330	298	316	307	334	338

Complessivi girevoli Serie 80/M nelle varie tipologie di fissaggi, ruote assemblate
Swivel castors 80/M Series in the different types of fixings, assembled wheels

Requisiti dei Complessivi assemblati alle varie Ruote Requirements of the castors assembled with the different wheels		G	Gd	Gc	GdA	GcA	SR	SRd	N	Nd
Portata Dinamica conforme UNI EN 12527 Dynamic load capacity conform UNI EN 12527	D	60	60	60	-	-	70	70	30	30
Portata Statica conforme UNI EN 12527 Static load capacity conform UNI EN 12527	S	90	90	90	-	-	105	105	45	45
Conducibilita'Elettrica conforme UNI EN 12527 Electric conductivity in compliance with UNI EN 12527	Ω hom				< 10.000					

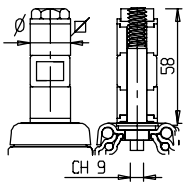

	Ø	18	19	22	25	28
EL +		-	-	-	-	-
	⌀	21	26	31	-	-
EL +		-	-	-	-	-

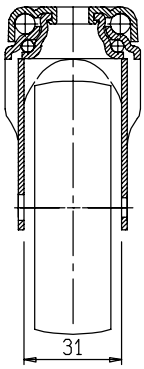

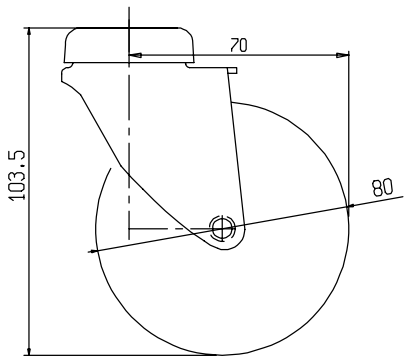

ITEM	gr	
8123	5	-

gr = Peso per 1 pezzo
gr = Weight for a piece

	Rondella Washer	B10 ø10.2	F	PI 60x60	P3 77x67	P7 68.5x48	P6 92x65	E	EL + Espansori Expanders	C	A2	A3
	0 ø12.2	a Richiesta On request B8 ø9 ø10.2	M10 M12 CH9					CH9	CH9			

80G	ITEM	80/M/G0	80/M/GB10	80/M/GF	80/M/GPI	80/M/GP3	80/M/GP7	80/M/GP6	80/M/GE	80/M/GEL	80/M/GC	80/M/GA2	80/M/GA3
	gr	292	295	320	322	338	319	365	346	364	355	383	387
80Gd	ITEM	80/M/Gd0	80/M/GdB10	80/M/GdF	80/M/GdPI	80/M/GdP3	80/M/GdP7	80/M/GdP6	80/M/GdE	80/M/GdEL	80/M/GdC	80/M/GdA2	80/M/GdA3
	gr	310	313	338	340	356	337	383	364	382	373	400	404
80Gc	ITEM	80/M/Gc0	80/M/GcB10	80/M/GcF	80/M/GcPI	80/M/GcP3	80/M/GcP7	80/M/GcP6	80/M/GcE	80/M/GcEL	80/M/GcC	80/M/GcA2	80/M/GcA3
	gr	364	368	392	394	410	391	437	419	437	427	454	458
80GdA	ITEM	80/M/GdA0	80/M/GdAB10	80/M/GdAF	80/M/GdAPI	80/M/GdAP3	80/M/GdAP7	80/M/GdAP6	80/M/GdAE			80/M/GdAA2	80/M/GdAA3
	gr	329	332	357	359	375	356	402	383			419	423
80GcA	ITEM	80/M/GcA0	80/M/GcAB10	80/M/GcAF	80/M/GcAPI	80/M/GcAP3	80/M/GcAP7	80/M/GcAP6	80/M/GcAE			80/M/GcAA2	80/M/GcAA3
	gr	364	368	392	394	410	391	437	419			454	458
80SR	ITEM	80/M/SR0	80/M/SRB10	80/M/SRF	80/M/SRPI	80/M/SRP3	80/M/SRP7	80/M/SRP6	80/M/SRE	80/M/SREL	80/M/SRC	80/M/SRA2	80/M/SRA3
	gr	243	246	271	273	289	270	316	297	315	306	334	338
80SRd	ITEM	80/M/SRd0	80/M/SRdB10	80/M/SRdF	80/M/SRdPI	80/M/SRdP3	80/M/SRdP7	80/M/SRdP6	80/M/SRdE	80/M/SRdEL	80/M/SRdC	80/M/SRdA2	80/M/SRdA3
	gr	261	264	289	291	307	288	334	315	333	324	352	356
80N	ITEM	80/M/N0	80/M/NB10	80/M/NF	80/M/NPI	80/M/NP3	80/M/NP7	80/M/NP6	80/M/NE	80/M/NEL	80/M/NC	80/M/NA2	80/M/NA3
	gr	224	227	252	253	269	250	296	278	296	287	314	318
80Nd	ITEM	80/M/Nd0	80/M/NdB10	80/M/NdF	80/M/NdPI	80/M/NdP3	80/M/NdP7	80/M/NdP6	80/M/NdE	80/M/NdEL	80/M/NdC	80/M/NdA2	80/M/NdA3
	gr	252	255	280	282	298	279	325	306	324	315	342	346

Complessivi girevoli Serie 100/M nelle varie tipologie di fissaggi, ruote assemblate
Swivel Castors 100/M Series in the different types of fixings, assembled wheels

Requisiti dei Complessivi assemblati alle varie Ruote Requirements of the castors assembled with the different wheels		G	Gd	Gcc	GdA	GcA	SR	SRd	N	Nd
Portata Dinamica conforme UNI EN 12527 Dynamic load capacity conform UNI EN 12527	D	60	60	60	-	-	80	80	20	20
Portata Statica conforme UNI EN 12527 Static load capacity conform UNI EN 12527	S	90	90	90	-	-	120	120	30	30
Conducibilita'Elettrica conforme UNI EN 12527 Electric conductivity in compliance with UNI EN 12527	hom				< 10.000					

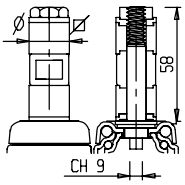

	Ø	18	19	22	25	28
EL +		-	-	-	-	-
	Ø	21	26	31	-	-
EL +		-	-	-	-	-

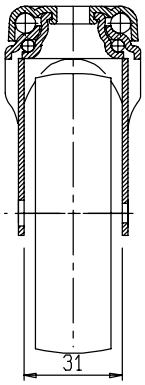

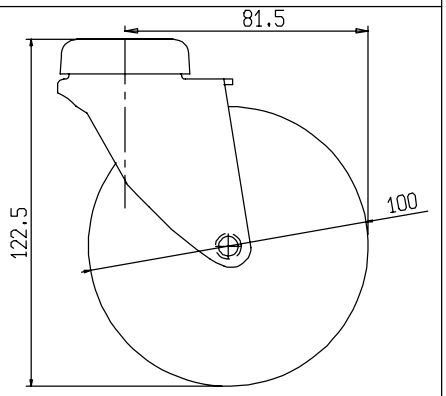

ITEM	gr	
8123	5	-

gr = Peso per 1 pezzo
gr = Weight for a piece

	Rondella Washer	B10 ø10.2 a Richiesta On request B8 ø9	F	PI 60x60	P3 77x67	P7 68.5x48	P6 92x65	E	EL +Espansori Expanders	C	A2	A3
	O ø12.2	ø10.2	M10 M12 CH9					CH9	CH9			

	ITEM	100/M/G0	100/M/GB10	100/M/GF	100/M/GPI	100/M/GP3	100/M/GP7	100/M/GP6	100/M/GE	100/M/GEL	100/M/GC	100/M/GA2	100/M/GA3
100G	gr	354	357	382	385	401	382	428	408	426	417	444	448
100Gd	ITEM	100/M/Gd0	100/M/GdB10	100/M/GdF	100/M/GdPI	100/M/GdP3	100/M/GdP7	100/M/GdP6	100/M/GdE	100/M/GdEL	100/M/GdC	100/M/GdA2	100/M/GdA3
	gr	385	388	413	418	434	415	461	439	457	448	475	479
100Gcc	ITEM	100/M/Gcc0	100/M/GccB10	100/M/GccF	100/M/GccPI	100/M/GccP3	100/M/GccP7	100/M/GccP6	100/M/GccE	100/M/GccEL	100/M/GccC	100/M/GccA2	100/M/GccA3
	gr	385	388	413	418	434	415	461	439	457	448	475	479
100GdA	ITEM	100/M/GdA0	100/M/GdAB10	100/M/GdAF	100/M/GdAPI	100/M/GdAP3	100/M/GdAP7	100/M/GdAP6	100/M/GdAE			100/M/GdAA2	100/M/GdAA3
	gr	401	404	429	434	450	431	477	455			491	495
100GcA	ITEM	100/M/GcA0	100/M/GcAB10	100/M/GcAF	100/M/GcAPI	100/M/GcAP3	100/M/GcAP7	100/M/GcAP6	100/M/GcAE			100/M/GcAA2	100/M/GcAA3
	gr	432	435	460	465	481	462	508	486			522	526
100SR	ITEM	100/M/SR0	100/M/SRB10	100/M/SRF	100/M/SRPI	100/M/SRP3	100/M/SRP7	100/M/SRP6	100/M/SRE	100/M/SREL	100/M/SRC	100/M/SRA2	100/M/SRA3
	gr	280	283	308	325	341	322	368	434	452	343	370	374
100SRd	ITEM	100/M/SRd0	100/M/SRdB10	100/M/SRdF	100/M/SRdPI	100/M/SRdP3	100/M/SRdP7	100/M/SRdP6	100/M/SRdE	100/M/SRdEL	100/M/SRdC	100/M/SRdA2	100/M/SRdA3
	gr	320	323	348	365	381	362	408	474	492	383	410	414
100N	ITEM	100/M/N0	100/M/NB10	100/M/NF	100/M/NPI	100/M/NP3	100/M/NP7	100/M/NP6	100/M/NE	100/M/NEL	100/M/NC	100/M/NA2	100/M/NA3
	gr	266	269	294	297	313	294	340	320	338	329	356	360
100Nd	ITEM	100/M/Nd0	100/M/NdB10	100/M/NdF	100/M/NdPI	100/M/NdP3	100/M/NdP7	100/M/NdP6	100/M/NdE	100/M/NdEL	100/M/NdC	100/M/NdA2	100/M/NdA3
	gr	301	304	329	332	348	329	375	355	373	364	391	395

Complessivi girevoli Serie 125/M nelle varie tipologie di fissaggi, ruote assemblate
Swivel castors 125/M Series in the different types of fixings, assembled wheels

Requisiti dei Complessivi assemblati alle varie Ruote Requirements of the castors assembled with the different wheels		G	Gd
Portata Dinamica conforme UNI EN 12527 Dynamic load capacity conform UNI EN 12527	D	65	65
Portata Statica conforme UNI EN 12527 Static load capacity conform UNI EN 12527	S	97.5	97.5

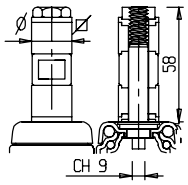

	Ø	18	19	22	25	28
EL +		-	-	-	-	-
	⌀	21	26	31	-	-
EL +		-	-	-	-	-

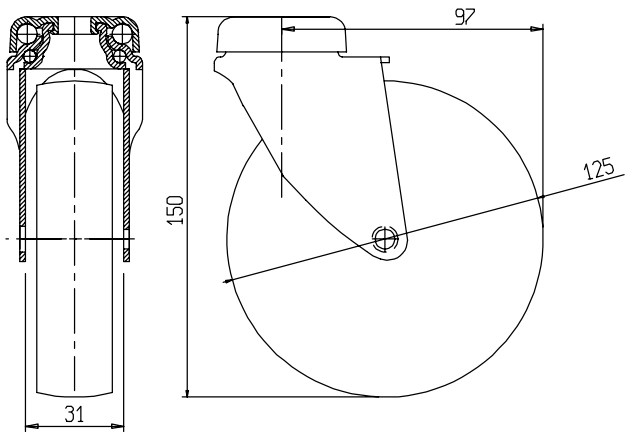

ITEM	gr	
8123	-	-

gr = Peso per 1 pezzo
gr = Weight for a piece

	Rondella Washer	B10 ø10.2 a Richiesta On request B8 ø9	F	PI 60x60	P3 77x67	P7 68.5x48	P6 92x65	E	EL + Espansori Expanders	C	A2	A3
	O ø12.2	ø10.2	M10 M12 CH9					CH9	CH9			

125G	ITEM	125/M/GO	125/M/GB10	125/M/GF	125/M/GPI	125/M/GP3	125/M/GP7	125/M/GP6	125/M/GE	125/M/GEL	125/M/GC	125/M/GA2	125/M/GA3
	gr	491	495	523	521	537	518	564	549	567	554	582	586

125Gd	ITEM	125/M/GdO	125/M/GdB10	125/M/GdF	125/M/GdPI	125/M/GdP3	125/M/GdP7	125/M/GdP6	125/M/GdE	125/M/GdE	125/M/GdC	125/M/GdA2	125/M/GdA3
	gr	540	546	574	570	586	567	613	597	615	603	630	634

Complessivi girevoli confreno Serie 35/MF - 50/MFT nelle varie tipologie di fissaggi,ruote assemblate

Swivel castors with brake 35/MF - 50/MFT Series in the different types of fixings, assembled wheels

Requisiti dei complessivi assemblati alle varie ruote Requirements of the castors assembled with the different wheels		PUc	N
Portata Dinamica conforme UNI EN 12527 Dynamic load capacity conform UNI EN 12527	daN D	100	70
Portata Statica conforme UNI EN 12527 Static load capacity conform UNI EN 12527	daN S	150	105
Resistenza Passiva del Dispositivo Frenante Conforme UNI EN 12527 Passive resistance of braking devicein compliance with UNI EN 12527	daN FT	-	-

ø 35

ø 50

	G	Gd	Gcc	PU	GdA	GcA	SR	N	Nd
daN D	50	50	50	80	40	40	-	30	30
daN S	75	75	75	120	60	60	-	45	45
daN FT	-	-	-	-					

Conducibilita'Elettrica conforme UNI EN 12527 Electric conductivity in compliance with UNI EN 12527	Ω hom	<10.000

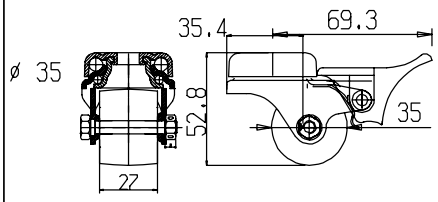

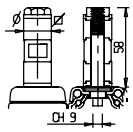

	ø	18	19	22	25	28
EL +		-	-	-	-	-
	ø	21	26	31	-	-
EL +		-	-	-	-	-

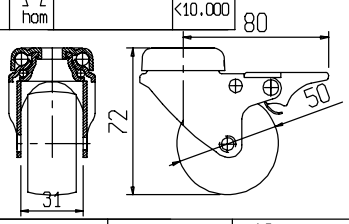

ITEM	gr	
8123	5	-

gr = Peso per 1 pezzo
gr = Weight for a piece

	O Rondella Washer	B10 ø10.2 a richiesta on request B8 ø9	F	PI 60x60	P3 77x67	P7 68.5x48	P6 92x65	E	EL + Espansori Expanders	A2	A3
	ø12.2	ø10.2	M10 M12 L CH9					CH9	CH9		

35PUc		35/MF/PUcO	35/MF/PUcB10	35/MF/PUcF	35/MF/PUcPI		35/MF/PUcP7		35/MF/PUcE		35/MF/PUcA2	35/MF/PUcA3
	gr	-	-	-	-		-		-		-	-
35N	ITEM	35/MF/NO	35/MF/NB10	35/MF/NF	35/MF/NPI		35/MF/NP7		35/MF/NE		35/MF/NA2	35/MF/NA3
	gr	-	-	-	203		-		-		-	-
50G	ITEM	50/MFT/GO	50/MFT/GB10	50/MFT/GF	50/MFT/GPI	50/MFT/GP3	50/MFT/GP7	50/MFT/GP6	50/MFT/GE	50/MFT/GEL	50/MFT/GA2	50/MFT/GA3
	gr	238	241	273	268	284	265	311	292	310	328	332
50Gd	ITEM	50/MFT/GdO	50/MFT/GdB10	50/MFT/GdF	50/MFT/GdPI	50/MFT/GdP3	50/MFT/GdP7	50/MFT/GdP6	50/MFT/GdE	50/MFT/GdEL	50/MFT/GdA2	50/MFT/GdA3
	gr	242	245	278	272	288	269	315	291	314	332	336
50Gcc	ITEM	50/MFT/GccO	50/MFT/GccB10	50/MFT/GccF	50/MFT/GccPI	50/MFT/GccP3	50/MFT/GccP7	50/MFT/GccP6	50/MFT/GccE	50/MFT/GccEL	50/MFT/GccA2	50/MFT/GccA3
	gr	251	254	286	281	297	278	324	305	323	341	345
50PU	ITEM	50/MFT/PUO	50/MFT/PUB10	50/MFT/PUF	50/MFT/PUPI	50/MFT/PUP3	50/MFT/PUP7	50/MFT/PUP6	50/MFT/PUE	50/MFT/PUEL	50/MFT/PUA2	50/MFT/PUA3
	gr	-	-	-	-	-	-	-	-	-	-	-
50GdA	ITEM	50/MFT/GdAO	50/MFT/GdAB10	50/MFT/GdAF	50/MFT/GdAPI	50/MFT/GdAP3	50/MFT/GdAP7	50/MFT/GdAP6	50/MFT/GdAE		50/MFT/GdAA2	50/MFT/GdAA3
	gr	258	261	294	288	304	285	331	307		348	352
50GcA	ITEM	50/MFT/GcAO	50/MFT/GcAB10	50/MFT/GcAF	50/MFT/GcAPI	50/MFT/GcAP3	50/MFT/GcAP7	50/MFT/GcAP6	50/MFT/GcAE		50/MFT/GcAA2	50/MFT/GcAA3
	gr	291	294	326	321	337	318	364	345		381	385
50SR	ITEM	50/MFT/SRO	50/MFT/SRB10	50/MFT/SRF	50/MFT/SRPI	50/MFT/SRP3	50/MFT/SRP7	50/MFT/SRP6	50/MFT/SRE	50/MFT/SREL	50/MFT/SRA2	50/MFT/SRA3
	gr	-	-	-	-	-	-	-	-	-	-	-
50N	ITEM	50/MFT/NO	50/MFT/NB10	50/MFT/NF	50/MFT/NPI	50/MFT/NP3	50/MFT/NP7	50/MFT/NP6	50/MFT/NE	50/MFT/NEL	50/MFT/NA2	50/MFT/NA3
	gr	219	222	254	249	265	246	392	273	291	309	313
50Nd	ITEM	50/MFT/NdO	50/MFT/NdB10	50/MFT/NdF	50/MFT/NdPI	50/MFT/NdP3	50/MFT/NdP7	50/MFT/NdP6	50/MFT/NdE	50/MFT/NdEL	50/MFT/NdA2	50/MFT/NdA3
	gr	234	237	269	266	282	263	309	288	306	324	328

Complessivi girevoli con freno Serie 60/MFT nelle varie tipologie di fissaggi, ruote assemblate
Swivel castors with brake 60/MFT Series in the different types of fixings, assembled wheels

Requisiti dei Complessivi assemblati alle varie Ruote Requirements of the castors assembled with the different wheels		G	Gd	Gcc	PU	GcA	SR	N	Nd
Portata Dinamica conforme UNI EN 12527 Dynamic load capacity conform UNI EN 12527	D	60	60	60	80	-	60	50	50
Portata Statica conforme UNI EN 12527 Static load capacity conform UNI EN 12527	S	90	90	90	120	-	90	75	75
Resistenza Passiva del Dispositivo Frenante Conforme UNI EN 12527 Passive resistance of braking devicein compliance with UNI EN 12527	FT	-	-	-	-	-		-	-
Conducibilita'Elettrica conforme UNI EN 12527 Electric conductivity in compliance with UNI EN 12527	Ω hom					< 10.000			

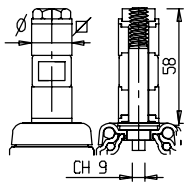

	ø	18	19	22	25	28
EL+		-	-	-	-	-
	⌀	21	26	31	-	-
EL+		-	-	-	-	-

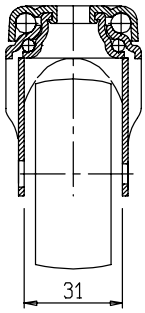

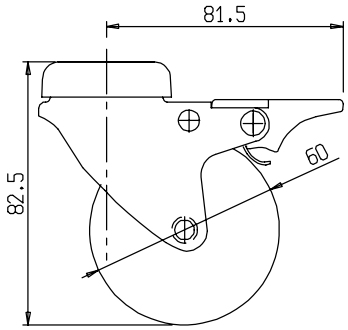

ITEM	gr	
8123	5	-

gr = Peso per 1 pezzo
gr = Weight for a piece

	Rondella Washer	B10 ø10.2	F	PI 60x60	P3 77x67	P7 68.5x48	P6 92x65	E	EL +Espansori Expanders	C	A2	A3
	0 ø12.2	a Richiesta On request B8 ø9 ø10.2	M10 M12 CH9					CH9	CH9			

60G	ITEM	60/MFT/G0	60/MFT/GB10	60/MFT/GF	60/MFT/GPI	60/MFT/GP3	60/MFT/GP7	60/MFT/GP6	60/MFT/GE	60/MFT/GEL	60/MFT/GC	60/MFT/GA2	60/MFT/GA3
	gr	257	260	298	290	306	287	333	311	329	320	347	351
60Gd	ITEM	60/MFT/Gd0	60/MFT/GdB10	60/MFT/GdF	60/MFT/GdPI	60/MFT/GdP3	60/MFT/GdP7	60/MFT/GdP6	60/MFT/GdE	60/MFT/GdEL	60/MFT/GdC	60/MFT/GdA2	60/MFT/GdA3
	gr	261	265	302	294	310	291	337	315	339	324	351	355
60Gcc	ITEM	60/MFT/Gcc0	60/MFT/GccB10	60/MFT/GccF	60/MFT/GccPI	60/MFT/GccP3	60/MFT/GccP7	60/MFT/GccP6	60/MFT/GccE	60/MFT/GccEL	60/MFT/GccC	60/MFT/GccA2	60/MFT/GccA3
	gr	276	280	317	306	322	303	349	330	294	339	366	370
60PU	ITEM	60/MFT/PU0	60/MFT/PUB10	60/MFT/PUF	60/MFT/PUPI	60/MFT/PUP3	60/MFT/PUP7	60/MFT/PUP6	60/MFT/PUE	60/MFT/PUEL	60/MFT/PUC	60/MFT/PUA2	60/MFT/PUA3
	gr	250	256	280	283	299	280	326	303	321	313	324	344
60Gd	ITEM	60/MFT/GdA0	60/MFT/GdAB10	60/MFT/GdAF	60/MFT/GdAPI	60/MFT/GdAP3	60/MFT/GdAP7	60/MFT/GdAP6	60/MFT/GdAE			60/MFT/GdAA2	60/MFT/GdAA3
	gr	285	289	326	318	334	315	361	339			375	379
60GcA	ITEM	60/MFT/GcA0	60/MFT/GcAB10	60/MFT/GcAF	60/MFT/GcAPI	60/MFT/GcAP3	60/MFT/GcAP7	60/MFT/GcAP6	60/MFT/GcAE			60/MFT/GcAA2	60/MFT/GcAA3
	gr	321	325	362	351	367	348	394	375			411	415
60SR	ITEM	60/MFT/SR0	60/MFT/SRB10	60/MFT/SRF	60/MFT/SRPI	60/MFT/SRP3	60/MFT/SRP7	60/MFT/SRP6	60/MFT/SRE	60/MFT/SREL	60/MFT/SRC	60/MFT/SRA2	60/MFT/SRA3
	gr	229	235	259	262	278	259	305	282	300	292	303	307
60N	ITEM	60/MFT/N0	60/MFT/NB10	60/MFT/NF	60/MFT/NPI	60/MFT/NP3	60/MFT/NP7	60/MFT/NP6	60/MFT/NE	60/MFT/NEL	60/MFT/NC	60/MFT/NA2	60/MFT/NA3
	gr	230	234	266	259	275	256	302	287	305	293	320	324
60Nd	ITEM	60/MFT/Nd0	60/MFT/NdB10	60/MFT/NdF	60/MFT/NdPI	60/MFT/NdP3	60/MFT/NdP7	60/MFT/NdP6	60/MFT/NdE	60/MFT/NdEL	60/MFT/NdC	60/MFT/NdA2	60/MFT/NdA3
	gr	249	253	285	279	295	276	322	307	325	312	339	343

Complessivi girevoli con freno Serie 75/MFT nelle varie tipologie di fissaggi, ruote assemblate
Swivel castors with brake 75/MFT Series in the different types of fixings, assembled wheels

Requisiti dei Complessivi assemblati alle varie Ruote Requirements of the castors assembled with the different wheels		G	Gd	Gcc	PU	GdA	GcA	SR	SRd	N	Nd
Portata Dinamica conforme UNI EN 12527 Dynamic load capacity conform UNI EN 12527	D	60	60	60	60	50	50	70	70	30	30
Portata Statica conforme UNI EN 12527 Static load capacity conform UNI EN 12527	S	90	90	90	90	75	75	105	105	45	45
Resistenza Passiva del Dispositivo Frenante Conforme UNI EN 12527 Passive resistance of braking devicein compliance with UNI EN 12527	FT	12	12	12	-	-	-	15	15	4	4
Conducibilita'Elettrica conforme UNI EN 12527 Electric conductivity in compliance with UNI EN 12527	Ω hom					< 10.000					

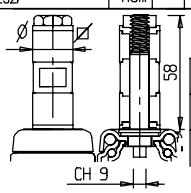

	Ø	18	19	22	25	28
EL+		-	-	-	-	-
	Ø	21	26	31	-	-
EL+		-	-	-	-	-

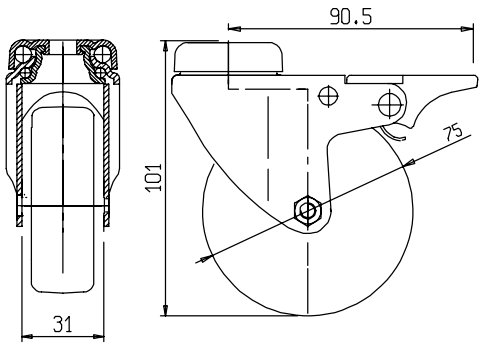

ITEM	gr	
8123	5	-

gr = Peso per 1 pezzo
gr = Weight for a piece

	Rondella Washer 0	B10 ø10.2 a Richiesta On request B8 ø9	F	PI 60x60	P3 77x67	P7 68.5x48	P6 92x65	E	EL +Espansori Expanders	C	A2	A3
	ø12.2	ø10.2	M10 M12 CH9					CH9	CH9			

75G	ITEM	75/MFT/G0	75/MFT/GB10	75/MFT/GF	75/MFT/GPI	75/MFT/GP3	75/MFT/GP7	75/MFT/GP6	75/MFT/GE	75/MFT/GEL	75/MFT/GC	75/MFT/GA2	75/MFT/GA3
	gr	326	333	365	355	371	262	398	380	398	389	416	420
75Gd	ITEM	75/MFT/Gd0	75/MFT/GdB10	75/MFT/GdF	75/MFT/GdPI	75/MFT/GdP3	75/MFT/GdP7	75/MFT/GdP6	75/MFT/GdE	75/MFT/GdEL	75/MFT/GdC	75/MFT/GdA2	75/MFT/GdA3
	gr	344	351	383	378	394	375	421	398	416	407	434	438
75Gcc	ITEM	75/MFT/Gcc0	75/MFT/GccB10	75/MFT/GccF	75/MFT/GccPI	75/MFT/GccP3	75/MFT/GccP7	75/MFT/GccP6	75/MFT/GccE	75/MFT/GccEL	75/MFT/GccC	75/MFT/GccA2	75/MFT/GccA3
	gr	342	348	381	369	385	366	412	396	414	405	432	436
75PU	ITEM	75/MFT/PU0	75/MFT/PUB10	75/MFT/PUF	75/MFT/PUPI	75/MFT/PUP3	75/MFT/PUP7	75/MFT/PUP6	75/MFT/PUE	75/MFT/PUEL	75/MFT/PUC	75/MFT/PUA2	75/MFT/PUA3
	gr	320	323	348	362	378	359	405	374	392	383	410	414
75GdA	ITEM	75/MFT/GdA0	75/MFT/GdAB10	75/MFT/GdAF	75/MFT/GdAPI	75/MFT/GdAP3	75/MFT/GdAP7	75/MFT/GdAP6	75/MFT/GdAE			75/MFT/GdAA2	75/MFT/GdAA3
	gr	375	382	414	409	425	406	452	429			465	469
75GcA	ITEM	75/MFT/GcA0	75/MFT/GcAB10	75/MFT/GcAF	75/MFT/GcAPI	75/MFT/GcAP3	75/MFT/GcAP7	75/MFT/GcAP6	75/MFT/GcAE			75/MFT/GcAA2	75/MFT/GcAA3
	gr	410	416	449	437	453	434	480	464			533	537
75SR	ITEM	75/MFT/SR0	75/MFT/SRB10	75/MFT/SRF	75/MFT/SRPI	75/MFT/SRP3	75/MFT/SRP7	75/MFT/SRP6	75/MFT/SRE	75/MFT/SREL	75/MFT/SRC	75/MFT/SRA2	75/MFT/SRA3
	gr	302	306	341	332	348	329	375	356	374	365	392	396
75SRd	ITEM	75/MFT/SRd0	75/MFT/SRdB10	75/MFT/SRdF	75/MFT/SRdPI	75/MFT/SRdP3	75/MFT/SRdP7	75/MFT/SRdP6	75/MFT/SRdE	75/MFT/SRdEL	75/MFT/SRdC	75/MFT/SRdA2	75/MFT/SRdA3
	gr	339	343	378	369	385	366	412	393	411	402	429	433
75N	ITEM	75/MFT/N0	75/MFT/NB10	75/MFT/NF	75/MFT/NPI	75/MFT/NP3	75/MFT/NP7	75/MFT/NP6	75/MFT/NE	75/MFT/NEL	75/MFT/NC	75/MFT/NA2	75/MFT/NA3
	gr	281	285	317	310	326	307	353	332	350	344	371	375
75Nd	ITEM	75/MFT/Nd0	75/MFT/NdB10	75/MFT/NdF	75/MFT/NdPI	75/MFT/NdP3	75/MFT/NdP7	75/MFT/NdP6	75/MFT/NdE	75/MFT/NdEL	75/MFT/NdC	75/MFT/NdA2	75/MFT/NdA3
	gr	309	313	346	339	355	336	382	360	378	372	399	403

Complessivi girevoli con freno Serie 80/MFT nelle varie tipologie di fissaggi, ruote assemblate

Swivel castors with brake 80/MFT Series in the different types of fixings, assembled wheels

Requisiti dei Complessivi assemblati alle varie Ruote Requirements of the castors assembled with the different wheels		G	Gd	Gc	GdA	GcA	SR	SRd	N	Nd
Portata Dinamica conforme UNI EN 12527 Dynamic load capacity conform UNI EN 12527	D	60	60	60	-	-	70	70	30	30
Portata Statica conforme UNI EN 12527 Static load capacity conform UNI EN 12527	S	90	90	90	-	-	105	105	45	45
Resistenza Passiva del Dispositivo Frenante Conforme UNI EN 12527 Passive resistance of braking devicein compliance with UNI EN 12527	FT	12	12	12	-	-	-	-	4	4
Conducibilita'Elettrica conforme UNI EN 12527 Electric conductivity in compliance with UNI EN 12527	hom				< 10.000					

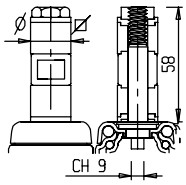

	Ø	18	19	22	25	28
EL +		-	-	-	-	-
	⌀	21	26	31	-	-
EL +		-	-	-	-	-

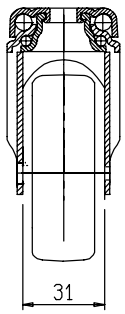

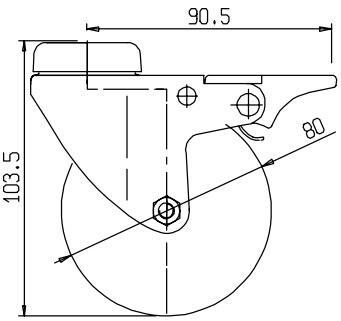

ITEM	gr	
8123	5	-

gr = Peso per 1 pezzo

gr = Weight for a piece

Rondella Washer	B10 ø10.2 a Richiesta On request B8 ø9	F	PI 60x60	P3 77x67	P7 68.5x48	P6 92x65	E	EL Expanders + Espansori	C	A2	A3
0 ø12.2	ø10.2	M10 M12 CH9					CH9	CH9			

	ITEM	80/MFT/G0	80/MFT/GB10	80/MFT/GF	80/MFT/GPI	80/MFT/GP3	80/MFT/GP7	80/MFT/GP6	80/MFT/GE	80/MFT/GEL	80/MFT/GC	80/MFT/GA2	80/MFT/GA3
80G	gr	354	361	393	384	400	381	427	408	427	417	444	448
80Gd	ITEM	80/MFT/Gd0	80/MFT/GdB10	80/MFT/GdF	80/MFT/GdPI	80/MFT/GdP3	80/MFT/GdP7	80/MFT/GdP6	80/MFT/GdE	80/MFT/GdEL	80/MFT/GdC	80/MFT/GdA2	80/MFT/GdA3
	gr	372	371	411	402	418	399	445	426	444	435	457	461
80Gc	ITEM	80/MFT/Gc0	80/MFT/GcB10	80/MFT/GcF	80/MFT/GcPI	80/MFT/GcP3	80/MFT/GcP7	80/MFT/GcP6	80/MFT/GcE	80/MFT/GcEL	80/MFT/GcC	80/MFT/GcA2	80/MFT/GcA3
	gr	430	434	466	460	476	457	503	481	506	493	520	524
80GdA	ITEM	80/MFT/GdA0	80/MFT/GdAB10	80/MFT/GdAF	80/MFT/GdAPI	80/MFT/GdAP3	80/MFT/GdAP7	80/MFT/GdAP6	80/MFT/GdAE			80/MFT/GdAA2	80/MFT/GdAA3
	gr	391	390	430	421	437	418	464	445			476	480
80GcA	ITEM	80/MFT/GcA0	80/MFT/GcAB10	80/MFT/GcAF	80/MFT/GcAPI	80/MFT/GcAP3	80/MFT/GcAP7	80/MFT/GcAP6	80/MFT/GcAE			80/MFT/GcAA2	80/MFT/GcAA3
	gr	430	434	466	460	476	457	503	481			520	524
80SR	ITEM	80/MFT/SR0	80/MFT/SRB10	80/MFT/SRF	80/MFT/SRPI	80/MFT/SRP3	80/MFT/SRP7	80/MFT/SRP6	80/MFT/SRE	80/MFT/SREL	80/MFT/SRC	80/MFT/SRA2	80/MFT/SRA3
	gr	305	309	341	335	351	332	378	356	381	368	395	399
80SRd	ITEM	80/MFT/SRd0	80/MFT/SRdB10	80/MFT/SRdF	80/MFT/SRdPI	80/MFT/SRdP3	80/MFT/SRdP7	80/MFT/SRdP6	80/MFT/SRdE	80/MFT/SRdEL	80/MFT/SRdC	80/MFT/SRdA2	80/MFT/SRdA3
	gr	323	327	359	353	369	350	396	374	399	386	413	417
80N	ITEM	80/MFT/N0	80/MFT/NB10	80/MFT/NF	80/MFT/NPI	80/MFT/NP3	80/MFT/NP7	80/MFT/NP6	80/MFT/NE	80/MFT/NEL	80/MFT/NC	80/MFT/NA2	80/MFT/NA3
	gr	286	293	325	316	332	313	359	340	358	349	376	380
80Nd	ITEM	80/MFT/Nd0	80/MFT/NdB10	80/MFT/NdF	80/MFT/NdPI	80/MFT/NdP3	80/MFT/NdP7	80/MFT/NdP6	80/MFT/NdE	80/MFT/NdEL	80/MFT/NdC	80/MFT/NdA2	80/MFT/NdA3
	gr	314	318	353	344	360	341	387	368	386	377	404	408

Complessivi girevoli con freno Serie 100/MFT nelle varie tipologie di fissaggi, ruote assemblate
Swivel castors with brake 100/MFT Series in the different types of fixings, assembled wheels

Requisiti dei Complessivi assemblati alle varie Ruote Requirements of the castors assembled with the different wheels		G	Gd	Gcc	GdA	GcA	SR	SRd	N	Nd
Portata Dinamica conforme UNI EN 12527 Dynamic load capacity conform UNI EN 12527	D	60	60	60	-	-	80	80	20	20
Portata Statica conforme UNI EN 12527 Static load capacity conform UNI EN 12527	S	90	90	90	-	-	120	120	30	30
Resistenza Passiva del Dispositivo Frenante Conforme UNI EN 12527 Passive resistance of braking devicein compliance with UNI EN 12527	FT	7	7	7	-	-	-	-		-
Conducibilita'Elettrica conforme UNI EN 12527 Electric conductivity in compliance with UNI EN 12527	Ω hom				< 10.000					

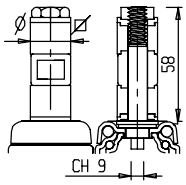

	Ø	18	19	22	25	28
EL +		-	-	-	-	-
	⌀	21	26	31	-	-
EL +		-	-	-	-	-

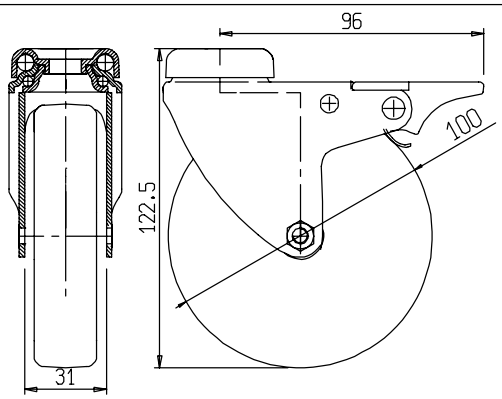

ITEM	gr	
8123	-	-

gr = Peso per 1 pezzo
gr = Weight for a piece

	Rondella Washer	B10 ø10.2 a Richiesta On request B8 ø9	F	PI 60x60	P3 77x67	P7 68.5x48	P6 92x65	E	EL +Espansori Expanders	C	A2	A3
	O ø12.2	ø10.2	M10 M12 CH9					CH9	CH9			

100G	ITEM	100/MFT/G0	100/MFT/GB10	100/MFT/GF	100/MFT/GPI	100/MFT/GP3	100/MFT/GP7	100/MFT/GP6	100/MFT/GE	100/MFT/GEL	100/MFT/GC	100/MFT/GA2	100/MFT/GA3
	gr	428	432	459	459	475	456	502	482	500	491	518	522
100Gd	ITEM	100/MFT/Gd0	100/MFT/GdB10	100/MFT/GdF	100/MFT/GdPI	100/MFT/GdP3	100/MFT/GdP7	100/MFT/GdP6	100/MFT/GdE	100/MFT/GdEL	100/MFT/GdC	100/MFT/GdA2	100/MFT/GdA3
	gr	449	458	490	479	495	476	522	513	531	512	539	543
100Gcc	ITEM	100/MFT/Gcc0	100/MFT/GccB10	100/MFT/GccF	100/MFT/GccPI	100/MFT/GccP3	100/MFT/GccP7	100/MFT/GccP6	100/MFT/GccE	100/MFT/GccEL	100/MFT/GccC	100/MFT/GccA2	100/MFT/GccA3
	gr	459	463	490	489	505	486	532	514	532	521	549	553
100GdA	ITEM	100/MFT/GdA0	100/MFT/GdAB10	100/MFT/GdAF	100/MFT/GdAPI	100/MFT/GdAP3	100/MFT/GdAP7	100/MFT/GdAP6	100/MFT/GdAE			100/MFT/GdAA2	100/MFT/GdAA3
	gr	465	474	506	495	511	492	538	529			555	559
100GcA	ITEM	100/MFT/GcA0	100/MFT/GcAB10	100/MFT/GcAF	100/MFT/GcAPI	100/MFT/GcAP3	100/MFT/GcAP7	100/MFT/GcAP6	100/MFT/GcAE			100/MFT/GcAA2	100/MFT/GcAA3
	gr	506	510	537	536	552	533	579	561			596	600
100SR	ITEM	100/MFT/SR0	100/MFT/SRB10	100/MFT/SRF	100/MFT/SRPI	100/MFT/SRP3	100/MFT/SRP7	100/MFT/SRP6	100/MFT/SRE	100/MFT/SREL	100/MFT/SRC	100/MFT/SRA2	100/MFT/SRA3
	gr	365	370	396	395	411	392	438	420	438	428	455	459
100SRd	ITEM	100/MFT/SRd0	100/MFT/SRdB10	100/MFT/SRdF	100/MFT/SRdPI	100/MFT/SRdP3	100/MFT/SRdP7	100/MFT/SRdP6	100/MFT/SRdE	100/MFT/SRdEL	100/MFT/SRdC	100/MFT/SRdA2	100/MFT/SRdA3
	gr	394	397	422	439	455	436	482	548	566	457	484	488
100N	ITEM	100/MFT/N0	100/MFT/NB10	100/MFT/NF	100/MFT/NPI	100/MFT/NP3	100/MFT/NP7	100/MFT/NP6	100/MFT/NE	100/MFT/NEL	100/MFT/NC	100/MFT/NA2	100/MFT/NA3
	gr	335	339	371	365	381	362	408	394	412	398	425	429
100Nd	ITEM	100/MFT/Nd0	100/MFT/NdB10	100/MFT/NdF	100/MFT/NdPI	100/MFT/NdP3	100/MFT/NdP7	100/MFT/NdP6	100/MFT/NdE	100/MFT/NdEL	100/MFT/NdC	100/MFT/NdA2	100/MFT/NdA3
	gr	375	379	411	405	421	402	448	434	452	438	465	469

Complessivi girevoli con freno Serie 125/MFT nelle varie tipologie di fissaggi, ruote assemblate

Swivel castors with brake 125/MFT Series in the different types of fixings, assembled wheels

Requisiti dei Complessivi assemblati alle varie Ruote Requirements of the castors assembled with the different wheels		G	Gd
Portata Dinamica conforme UNI EN 12527 Dynamic load capacity conform UNI EN 12527	D	65	65
Portata Statica conforme UNI EN 12527 Static load capacity conform UNI EN 12527	S	97.5	97.5
Resistenza Passiva del Dispositivo Frenante Conforme UNI EN 12527 Passive resistance of braking devicein compliance with UNI EN 12527	FT	-	-

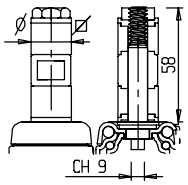

	ø	18	19	22	25	28
EL +		-	-	-	-	-
	⌀	21	26	31	-	-
EL +		-	-	-	-	-

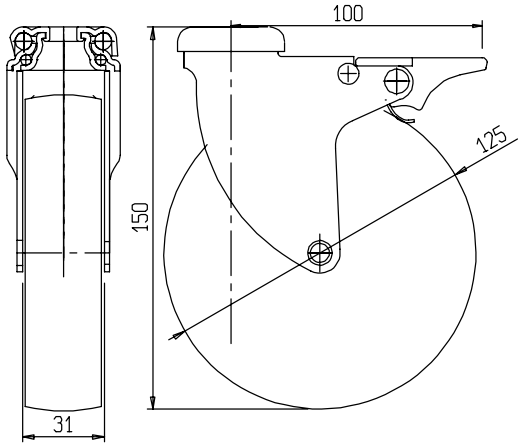

ITEM	gr	
8123	-	-

gr = Peso per 1 pezzo

gr = Weight for a piece

	Rondella Washer	B10 ø10.2 a Richiesta On request B8 ø9	F	PI 60x60	P3 77x67	P7 68.5x48	P6 92x65	E	EL + Espansori Expanders	C	A2	A3
	0 ø12.2	ø10.2	M10 M12 CH9					CH9	CH9			

125G	ITEM	125/MFT/G0	125/MFT/GB10	125/MFT/GF	125/MFT/GPI	125/MFT/GP3	125/MFT/GP7	125/MFT/GP6	125/MFT/GE	125/MFT/GEL	125/MFT/GC	125/MFT/GA2	125/MFT/GA3
	gr	571	573	601	617	598	610	644	624	642	634	659	663

125Gd	ITEM	125/MFT/Gd0	125/MFT/GdB10	125/MFT/GdF	125/MFT/GdPI	125/MFT/GdP3	125/MFT/GdP7	125/MFT/GdP6	125/MFT/GdE	125/MFT/GdEL	125/MFT/GdC	125/MFT/GdA2	125/MFT/GdA3
	gr	620	624	652	654	670	651	693	684	702	695	719	723

Supporti fissi Serie M per i vari Diametri di Ruote
Fixed forks of the M series for the various wheels diameters

Materiale: Lamiera ferro secondo standard EN 10130
Trattamanto superficiale:Zincatura passivata UNI ISO 2081
Material: Iron sheet subject to EN 10130
Surface treatment:passivated galvanisation subject to UNI ISO 2081

daN S Portata statica conforme UNI EN 12527 *

daN S Static load capacity conform UNI EN 12527 *

gr=Peso per 1 pezzo

gr=Weight for a piece

ITEM	35/M/SF
H	35.6
daN S	150
gr	-

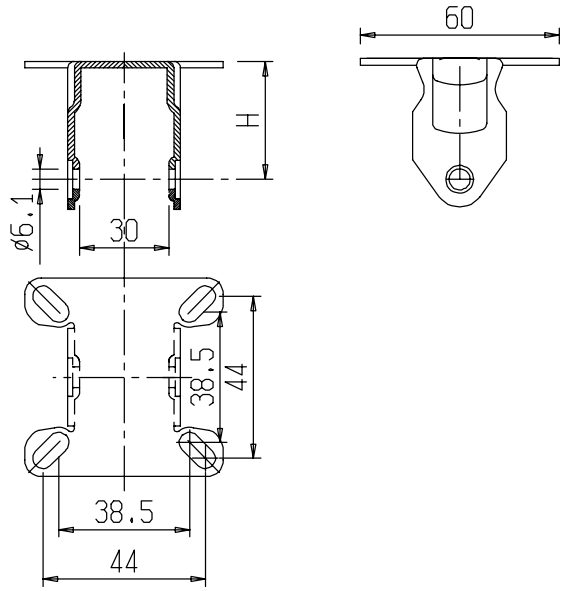

ø35

ITEM	50/M/SF	60/M/SF	75-80/M/SF	100/M/SF
H	47	52.5	63.5	72.5
daN S	75	75	90	90
gr	131	143	154	160

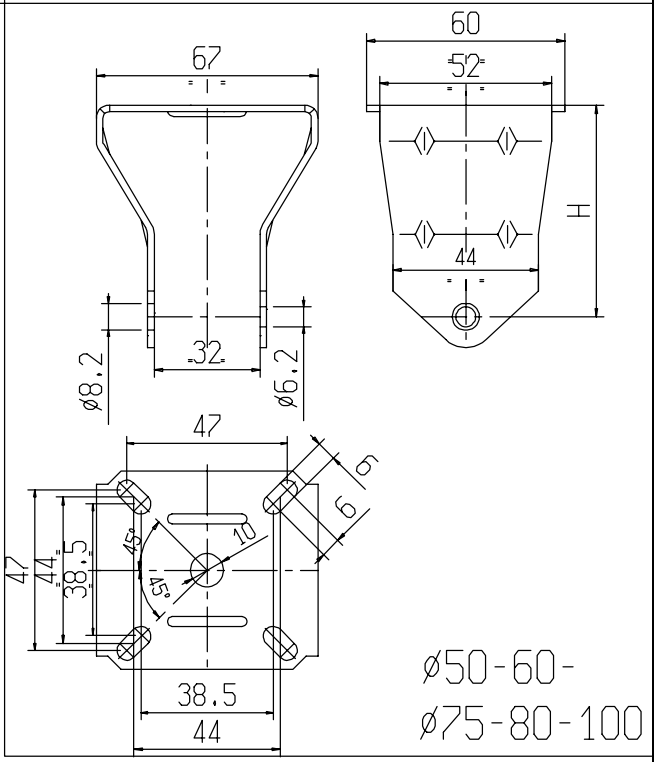

ø50-60-
ø75-80-100

* La portata statica indicata per i soli supporti corrisponde a 1.5 portata dinamica verificata secondo UNI 12527 montando una ruota in Nylon

* The static load capacity mentioned for the only forks correspond to 1.5 of dynamic load capacity checked accoding to UNI 12527 assembling with a nylon wheel

Complessivi fissi Serie M nelle varie tipologie di diametri, ruote assemblate
Fixed castors M Series in the various types of diameters, assembled wheels

Requisiti dei Complessivi assemblati alle varie Ruote
Requirements of the castors assembled with the different wheels

Portata Dinamica conforme UNI EN 12527 daN D
Dynamic load capacity conform UNI EN 12527

Portata Statica conforme UNI EN 12527 daN S
Static load capacity conform UNI EN 12527

gr=Peso per 1 pezzo
gr=Weight for a piece

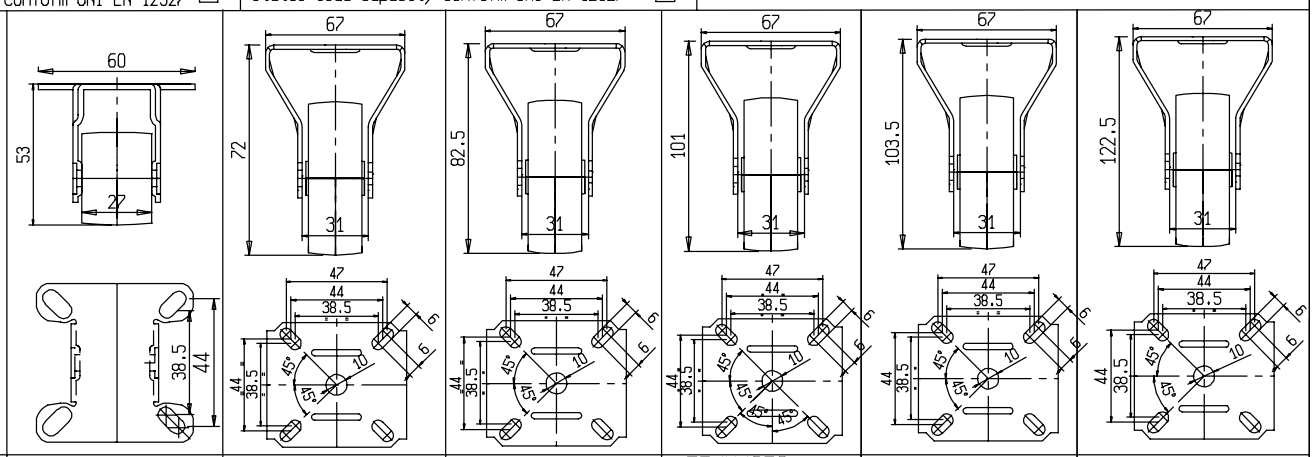

G	ITEM		50/M/SFG	60/M/SFG	75/M/SFG	80/M/SFG	100/M/SFG
	daN D		40	30	60	60	60
	daN S		60	45	90	90	90
	gr		195	214	254	282	349
Gd	ITEM		50/M/SFGd	60/M/SFGd	75/M/SFGd	80/M/SFGd	100/M/SFGd
	daN D		40	30	60	60	60
	daN S		60	45	90	90	90
	gr		199	218	273	301	381
Gc	ITEM					80/M/SFGc	
	daN D					60	
	daN S					90	
	gr					356	
Gcc	ITEM		50/M/SFGcc	60/M/SFGcc	75/M/SFGcc		100/M/SFGcc
	daN D		40	30	60		60
	daN S		60	45	90		90
	gr		208	234	270		380
PUc PU ø35	ITEM	35/M/SFPUc	50/M/SFPU	60/M/SFPU	75/M/SFPU		
	daN D	130	80	90	-		
	daN S	195	120	135	-		
	gr		-		258		
GdA	ITEM		50/M/SFGdA	60/M/SFGdA	75/M/SFGdA	80/M/SFGdA	100/M/SFGdA
	daN D		-	-	-	-	-
	daN S		-	-	-	-	-
	gr		215	242	304	320	397
GcA	ITEM		50/M/SFGcA	60/M/SFGcA	75/M/SFGcA	80/M/SFGcA	100/M/SFGcA
	daN D		-	-	-	-	-
	daN S		-	-	-	-	-
	gr		248	279	301	356	427
SR	ITEM		50/M/SFSR	60/M/SFSR	75/M/SFSR	80/M/SFSR	100/M/SFSR
	daN D		-	40	70	70	-
	daN S		-	60	105	105	-
	gr		-	186	230	251	284
SRd	ITEM				75/M/SFSRd	80/M/SFSRd	100/M/SFSRd
	daN D				70	70	-
	daN S				105	105	-
	gr				252	269	313
N	ITEM		50/M/SFN	60/M/SFN	75/M/SFN	80/M/SFN	100/M/SFN
	daN D		60	70	80	70	70
	daN S		90	105	120	105	105
	gr		176	183	207	214	261
Nd	ITEM		50/M/SFNd	60/M/SFNd	75/M/SFNd	80/M/SFNd	100/M/SFNd
	daN D		60	70	80	70	70
	daN S		90	105	120	105	105
	gr		191	203	235	242	301

Requisiti Ruote Serie 30 nelle varie tipologie di: Diametri, Battistrada, Organi di Rotolamento
Wheels series 30 Requirements in the various types of :Diameter, Tyres, Rolling parts

Ruota tipo / Wheel type	G	Gd	GCC	GdA	GcA	PU	SR	SRd	N
Catteristiche del Battistrada / Tyres characteristics	Gomma Grigia / Grey Rubber			Gomma Conduttiva Nera / Conductive Black rubber		Poliuretano Colore Arancio / Polyuretane Orange Color	Gomma Sintetica Grigia / Synthetic Grey rubber		Nylon Nero / Black Nylon
Durezza del Battistrada conforme UNI EN 12527 / Tyres hardness in compliance with UNI EN 12527	shore A -	-	-	-	-	85	-	-	>-
Temperature di Utilizzo Raccomandate / Recommended working temperatures	Max= +70°C	+70°C	+70°C	+40°C	+40°C	+40°C	+60°C	+60°C	+40°C
	Min= -30°C	-30°C	-30°C	-5°C	-5°C	-5 C	-10°C	-10°C	-0°C
Catteristiche del Nucleo / Wheel centre characteristics	Nylon Nero / Black Nylon			Nylon Nero Conduttivo / Conductive Black Nylon		Nylon Bianco / White Nylon	Polipropilene Grigio / Grey Polypropylene		
Catteristiche del Mozzo / Hub characteristics	Foro Liscio Plain Bearing	Tubo Parafilo Tube Threadguard	Cuscinetto a Sfera Parafilo Ball Bearing Threadguard	Foro Liscio Plain Bearing	Cuscinetto a Sfera Parafilo Ball Bearing Threadguard	Foro Liscio Plain Bearing	Foro Liscio Plain Bearing	Tubo Parafilo Tube Threadguard	Foro Liscio Plain Bearing
Conducibilita'Elettrica conforme UNI EN 12527 / Electric conductivity in compliance with UNI EN 12527	hom Ω / hom Ω			< 10.000	< 10.000		Peso per 1 pezzo = / Weight for a piece= gr		

Portata Dinamica conforme UNI EN 12527 / Dynamic load capacity conform UNI EN 12527 — daN D

Resistenza al Rotolamento (FR) alla Portata Nominale / Rolling resistance (FR) at rated capacity — daN FR

Portata Statica conforme UNI EN 12527 / Static load capacity conform UNI EN 12527 — daN S

Resistenza al Superamento Ostacolo (FO) alla Portata Nominale H ostacolo=1% ø della Ruota Min 0.5 mm / Obstacle overcoming resistance (FO) at rated capacity obstacle H=1% of wheel, min. 0.5 mm — daN FO

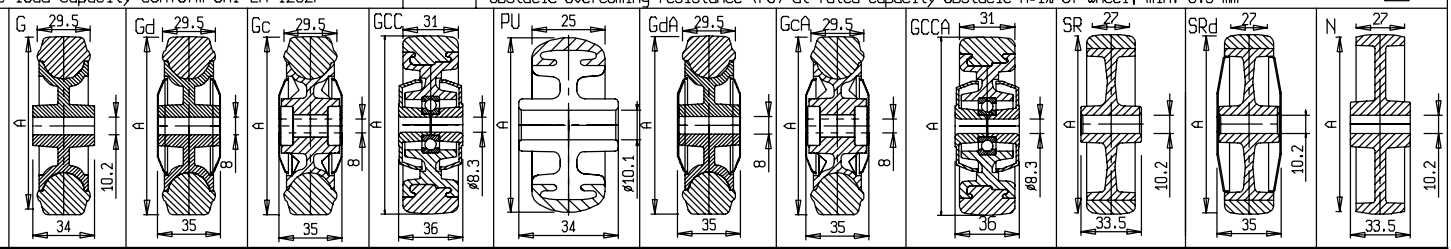

	G	Gd	Gc	GCC	PU	GdA	GcA	GCCA	SR	SRd	N
ITEM					60/30/PU						65/30/N
A					60						65
daN D					100						70
daN S					150						105
daN FR					-						-
daN FO											
gr					-						39
ITEM	75/30/G	75/30/Gd	75/30/Gc		75/30/PU	75/30/GdA	75/30/GcA				75/30/N
A	75	75	75		75	75	75				75
daN D	80	80	80		100	-	-				70
daN S	120	120	120		150	-	-				105
daN FR	-	-	-		-	-	-				-
daN FO	-	-	-		-	-	-				
gr	138	157	195		-	157	195				95
ITEM	80/30/G	80/30/Gd	80/30/Gc			80/30/GdA	80/30/GcA				80/30/N
A	80	80	80			80	80				80
daN D	85	85	85			-	-				80
daN S	127.5	127.5	127.5			-	-				120
daN FR	-	-	-			-	-				-
daN FO	-	-	-			-	-				
gr	163	182	219			182	219				68
ITEM	100/30/G	100/30/Gd		100/30/GCC		100/30/GdA		100/30/GCCA	100/30/SR		100/30/N
A	100	100		100		100		100	100		100
daN D	80	80		80		-		-	80		60
daN S	120	120		120		-		-	120		90
daN FR	-	-		-		-		-	-		-
daN FO	-	-		-		-		-			
gr	232	289		280		289		243	114		95
ITEM	125/30/G	125/30/Gd		125/30/GCC		125/30/GdA		125/30/GCCA	125/30/SR	125/30/SRd	125/30/N
A	125	125		125		125		125	125	125	125
daN D	90	90		-		-		-	90	90	-
daN S	135	135		-		-		-	135	135	-
daN FR	-	-		-		-		-	-	-	-
daN FO	-	-		-		-		-			
gr	362	425		390		-		325	170	218	158

Assali, cuscinetto e parafili per Ruote Serie 30
Axles, bearings and thread guards for 30 Series wheels

Raccomandazione adozione assali per le varie tipologie di ruote
Recommendation for the adoption of axles in the different types of wheels

30/G	30/Gd	30/Gc	30/GdA	30/GCC	30/PU	30/GcA	30/GCCA	30/SR	30/SRd	30/N
ITEM 64 292	ITEM 65 292	ITEM 65 292	ITEM 65 292	ITEM 65 292	ITEM 64 292	ITEM 65 292	ITEM 65 292	ITEM 64 292	ITEM 65 292	ITEM 60 -
ITEM 60 -	ITEM 59 -	ITEM - -	ITEM - -	ITEM - -	ITEM 60 -	ITEM - -	ITEM - -	ITEM 60 -	ITEM 83 -	ITEM 65 292
	ITEM 981 -	ITEM - -	ITEM 981 -	ITEM - -	ITEM - -	ITEM - -	ITEM - -	ITEM - -	ITEM 981 -	ITEM - -

ITEM	64	ASSE VITE (851/RID)
gr	30	
	-	SCREW AXLE (851/RID)

ITEM	65	ASSE VITE RID/846/RID
gr	23	
	-	SCREW AXLE RID/846/RID

ITEM	292	M8
gr	5	
	-	M8

ITEM	712	CUSCINETTO M 8x22x17.1 a sfera
gr	-	
	-	BALL BEARING M 8x22x17.1

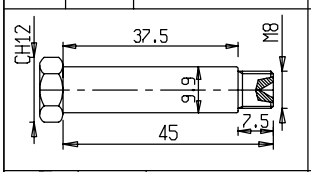

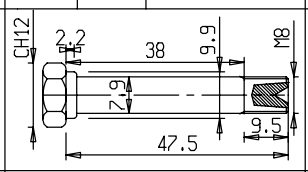

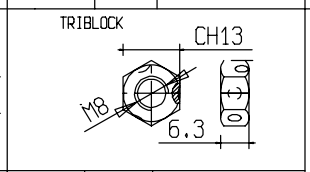

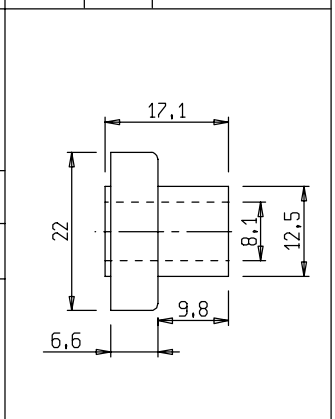

Peso per 1 pezzo = gr
Weight for a piece= gr

ITEM	60	ASSE RIB 1038/ass
gr	27	
	-	RIVETED AXLE 1038/ass

ITEM	981	TUBINO
gr	8	
	-	TUBE

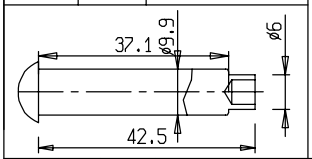

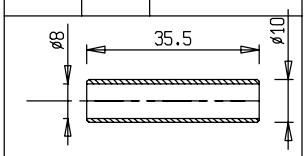

ITEM	gr		PARAFILI per 75/30/Gd RUOTE - THREADGUARDS for WHEELS 75/30/Gd -
398	10	-	

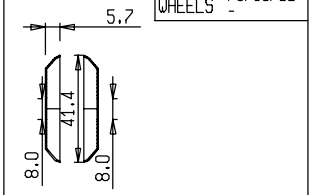

ITEM	gr		PARAFILI per 80/30/Gd RUOTE - THREADGUARDS for WHEELS 80/30/Gd
398	10	-	

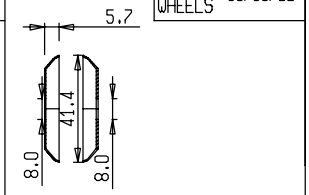

ITEM	gr		PARAFILI per 100/30/Gd RUOTE - THREADGUARDS for WHEELS 100/30/Gd -
358	10	-	

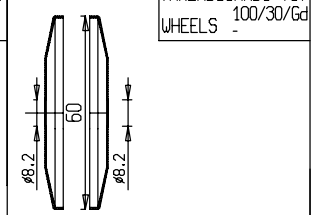

ITEM	gr		PARAFILI per 125/30/Gd RUOTE - THREADGUARDS for WHEELS 125/30/Gd -
403	20	-	

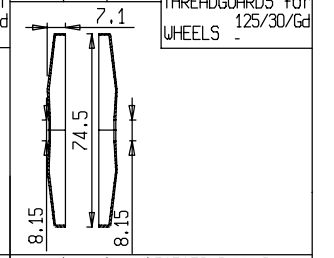

ITEM	gr		PARAFILI per 125/30/SRd RUOTE - THREADGUARDS for WHEELS 125/30/SRd -
403	20	- -	

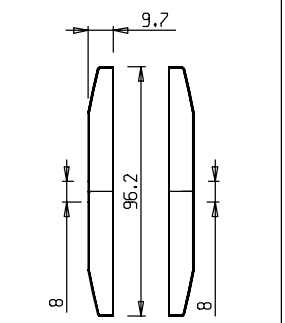

ITEM	gr		PARAFILI per RUOTE 75/30/Gc 75/30/GcA THREADGUARDS for WHEELS 75/30/Gc 75/30/GcA
398	10	- -	

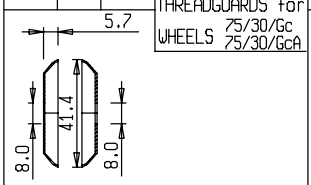

ITEM	gr		PARAFILI per RUOTE 80/30/Gc 80/30/GcA THREADGUARDS for WHEELS 80/30/Gc 80/30/GcA
398	10	- -	

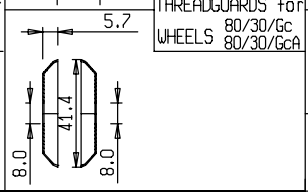

ITEM	gr		PARAFILI per RUOTE 100/30/GCCA 125/GCCA THREADGUARDS for WHEELS 100/30/GCCA 125/GCCA
378	7	- -	

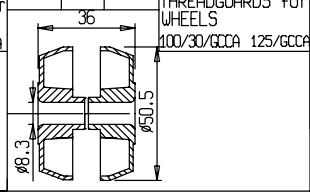

ITEM	gr		PARAFILI NYLON per RUOTE 100/30/GCC 125/30/GCC NYLON THREADGUARD for WHEELS 100/30/GCC 125/30/GCC
427	7	- -	

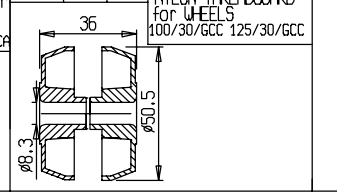

Gamma di Fissaggi Standard per Supporti Serie 30 E 30FT

Range of standard fixings for forks of the 30 and 30FT series

A Foro Passante ø10.2 per Vite di Fissaggio Imbus M10x25 (*)
With bolt hole of ø 10.2 for fixing screw IMBUS M10x25 (*)

A Foro Passante ø12.2 per Vite di Fissaggio Imbus M12x25 (*)
With bolt hole of ø 12.2 for fixing screw IMBUS M12x25 (*)

A Foro Passante ø13 per Vite di Fissaggio Imbus 1/2"x 25 (*)
With bolt hole of ø 13 for fixing screw IMBUS 1/2"x 25 (*)

A Perno Filettato Rivettato eo Vite Imbus fissata Dimensioni da tabella da Specificare sempre all' Ordine
With riveted thread stem,and/or fixed Imbus screw dimensions as per table to be specified when placing order

A Codolo Liscio Rivettato, dimensioni a richiesta.
With smooth riveted stem, dimensions on request.

B10

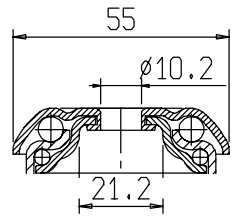

* Lunghezza della Vite Inseribile con Ruota Assemblata
* Length of screw that can be inserted with assembled wheel

B12

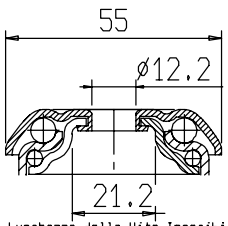

* Lunghezza della Vite Inseribile con Ruota Assemblata
* Length of screw that can be inserted with assembled wheel

B13

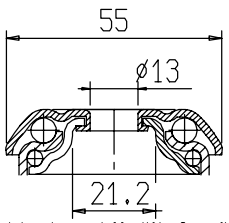

* Lunghezza della Vite Inseribile con Ruota Assemblata
* Length of screw that can be inserted with assembled wheel

F

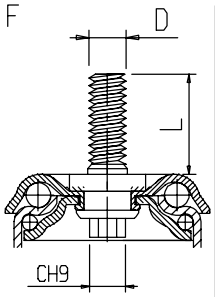

D	M10	M12
L	15-20-25-30	15-25

F

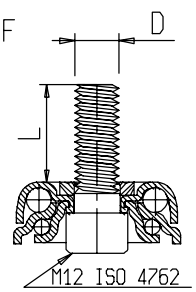

D	M12
L	9-13-18-23-28-33-38-43-53

C

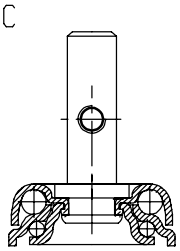

Fissaggio a Piastra Integrale P1 60X60
Integral plate fixing P1 60x60

P1

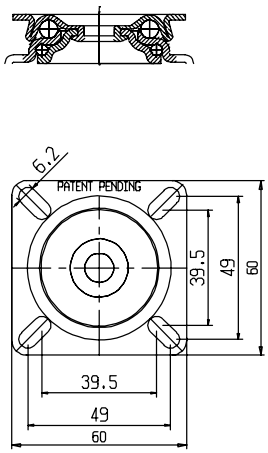

Diverse Asolature sono Eseguibili, Inscritte nel Perimetro Esterno
Possibility of various slots made in the external perimeter

Fissaggio a Piastra P2 105x85 + CHIODO 6080/P
PLATE FIXING P2 105X85 + NAIL 6080/P

P2

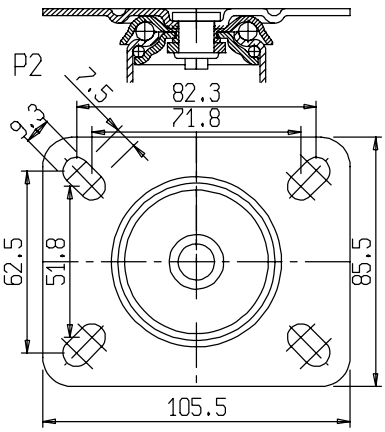

Diverse Asolature sono Eseguibili, Inscritte nel Perimetro Esterno
Possibility of various slots made in the external perimeter

Fissaggio a Piastra Integrale P3 77x67
Integral plate fixing P3 77x67

P3

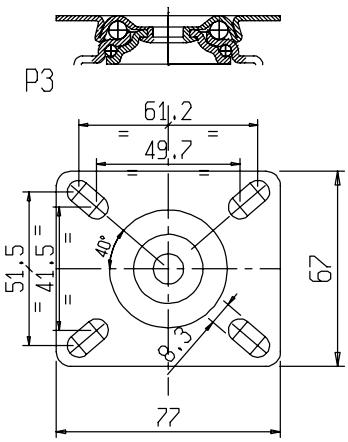

Diverse Asolature sono Eseguibili, Inscritte nel Perimetro Esterno
Possibility of various slots made in the external perimeter

Fissaggio a Piastra Integrale P6 92x65
Integral plate fixing P6 92x65

P6

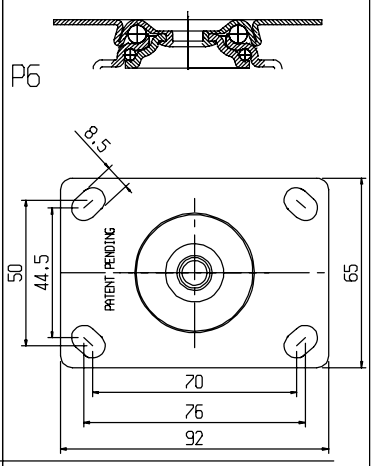

Diverse Asolature sono Eseguibili, Inscritte nel Perimetro Esterno
Possibility of various slots made in the external perimeter

Fissaggio ad Espansori in Gomma per Tubo Tondo
Dimensioni dei Gommini Disponibili vedi Tabella

Rubber expander fixing for round tube, see table for available dimensions

E

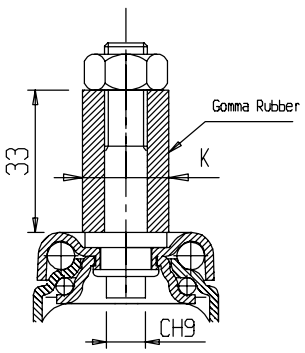

* sono Eseguibili Gommini Conduttivi
* Conductive rubber expander can also be made.

K	18	19	22	25	28

K=Diametro Interno del Tubo da Specificare sempre all Ordine

K=Inside diameter of the tube always to be specified when placing order

Fissaggio ad Espansori in Gomma per Tubo Tondo e Quadro
Dimensioni dei Gommini Disponibili vedi Tabella

Rubber expander fixing for round and square tube, see table for available dimensions of rubber expanders

EL

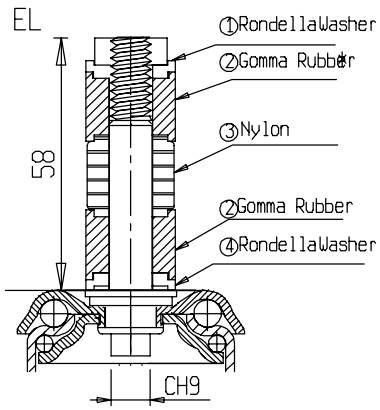

* sono Eseguibili Gommini Conduttivi
* Conductive rubber expander can also be made.

Ø	18	19	22	25	28
⧄	21	26	31		

Ø , ⧄ Dimensioni Interne del Tubo da Specificare sempre all Ordine

Ø , ⧄ Inside dimensions of tube always to be specified when placing order

Fissaggio con SET EL (*)
Fixing with EL SET (*)

(*) i Componenti (1 2 3 4) sono fornibili in Bustine da 1 SET
(*) Components (1,2,3 and 4) are available in packets of 1 set

SET EL

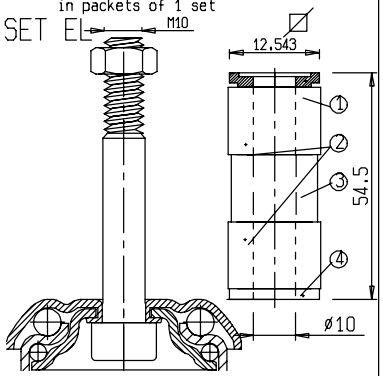

Si Raccomanda di Adottare: Supporto B10 + Vite Imbus M10x65+Dado + SET EL (1 2 3 4)

You are recommended to use housing type B10+screw IMBUS M10X65 + NUT + SET EL (1, 2, 3, 4)

ITEM	1904	1905	1906	1901	1907
SET EL	ø18	ø19	ø22	ø25	ø28
ITEM	1908	1902	1903		
SET EL	⧄21	⧄26	⧄31		

Supporti girevoli Serie 30 per i vari Diametri di Ruote e Gamma di Fissaggi
Swivel forks of the 30 series for the various wheels diameters and fixings range

Materiale: Lamiera ferro secondo standard EN 10130
Trattamanto superficiale:Zincatura passivata UNI ISO 2081
Corona sfere superiore: n. 17 sfere 1/4" ingrassate
Corona sfere inferiore: n. 30 sfere 5/32" ingrassate
Material: Iron sheet subject to EN 10130
Surface treatment:passivated galvanisation subject to UNI ISO 2081
Upper ball crown N. 17 greased balls 1/4
Lower ball crown N. 30 greased balls 5/32

daN S Portata Statica conforme UNI EN 12527
daN S Static load capacity conform UNI EN 12527

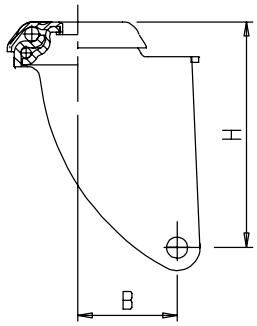

gr = Peso per 1 pezzo
gr = Weight for a piece

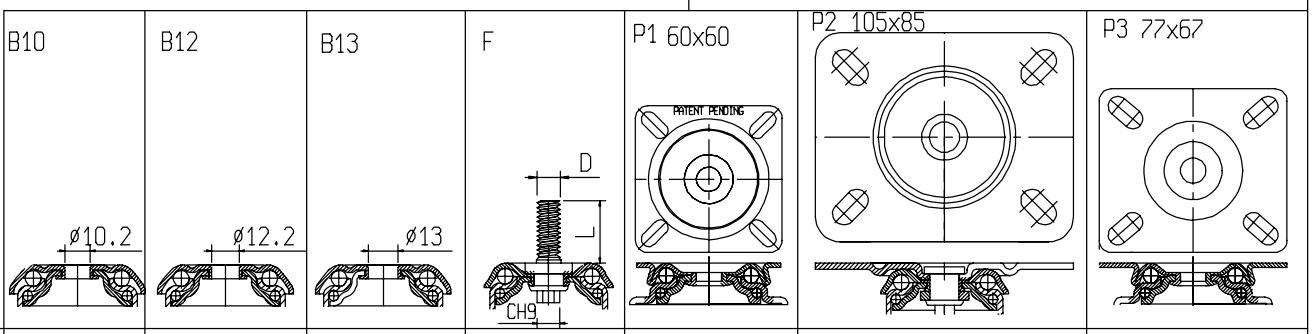

ITEM	65/30/B10	65/30/B12	65/30/B13	65/30/F	65/30/P1	65/30/P2	65/30/P3
H	51	51	51	51	51	53.5	51
B	17.5	17.5	17.5	17.5	17.5	17.5	17.5
daN S	-	-	-	-	-	-	-
gr	210	210	210	236	239	385	257

ITEM	75-80/30/B10	75-80/30/B12	75-80/30/B13	75-80/30/F	75-80/30/P1	75-80/30/P2	75-80/30/P3
H	62	62	62	62	62	64.5	62
B	26	26	26	26	26	26	26
daN S	75	75	75	75	75	75	75
gr	221	221	221	247	250	396	268

ITEM	100/30/B10	100/30/B12	100/30/B13	100/30/F	100/30/P1	100/30/P2	100/30/P3
H	73	73	73	73	73	75.5	73
B	28.5	28.5	28.5	28.5	28.5	28.5	28.5
daN S	75	75	75	75	75	75	75
gr	240	240	240	266	269	415	287
		-	-			-	

ITEM	125/30/B10	125/30/B12	125/30/B13	125/30/F	125/30/P1	125/30/P2	125/30/P3
H	87.5	87.5	87.5	87.5	87.5	90	87.5
B	37	37	37	37	37	37	37
daN S	-	-	-	-	-	-	-
gr	258	258	258	287	290	436	308

* La portata statica indicata per i soli supporti corrisponde a 1.5 portata dinamica verificata secondo UNI 12527 montando una ruota in Nylon

* The static load capacity mentioned for the only forks correspond to 1.5 of dynamic load capacity checked accoding to UNI 12527 assembling with a nylon wheel

Supporti girevoli Serie 30 per i vari Diametri di Ruote e Gamma di Fissaggi
Swivel forks of the 30 series for the various wheels diameters and fixings range

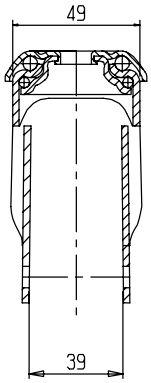

Espansori Expanders

	Ø	18	19	22	25	28
EL+		-	-	-	-	-
	⌀	21	26	31	-	-
EL+		-	-	-	-	-

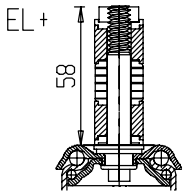

	P6 92x65	E	EL+ Espansori Expanders	C
	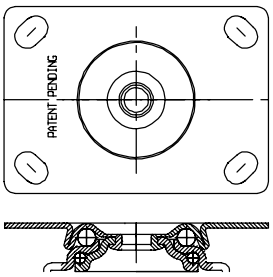	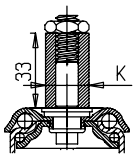	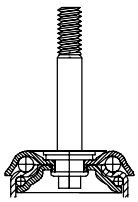	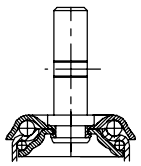
ITEM	65/30/P6	65/30/E	65/30/EL	65/30/C
H	51	51	51	51
B	17.5	17.5	17.5	17.5
daN S	-	-	-	-
gr	282	248	228	273
ITEM	75-80/30/P6	75-80/30/E	75-80/30/EL	75-80/30/C
H	62	62	62	62
B	26	26	26	26
daN S	75	75	75	75
gr	293	259	269	284
ITEM	100/30/P6	100/30/E	100/30/EL	100/30/C
H	73	73	73	73
B	28.5	28.5	28.5	28.5
daN S	75	75	75	75
gr	312	278	288	303
ITEM	125/30/P6	125/30/E	125/30/EL	125/30/C
H	87.5	87.5	87.5	87.5
B	37	37	37	37
daN S	-	-	-	-
gr	333	310	320	321

Supporti girevoli con freno serie 30FT per i vari Diametri di Ruote

Swivel forks with brake of the 30FT series for the various wheels diameters and fixings range

Materiale: Lamiera ferro secondo standard EN 10130
Trattamanto superficiale: Zincatura passivata UNI ISO 2081
Corona sfere superiore: n. 17 sfere 1/4" ingrassate
Corona sfere inferiore: n. 30 sfere 5/32" ingrassate
Material: Iron sheet subject to EN 10130
Surface treatment: passivated galvanisation subject to UNI ISO 2081
Upper ball crown N. 17 greased balls 1/4
Lower ball crown N. 30 greased balls 5/32

daN S Portata Statica conforme UNI EN 12527

daN S Static load capacity conform UNI EN 12527

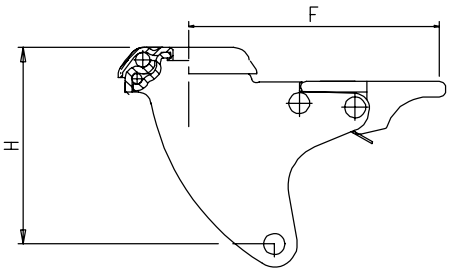

gr = Peso per 1 pezzo

gr = Weight for a piece

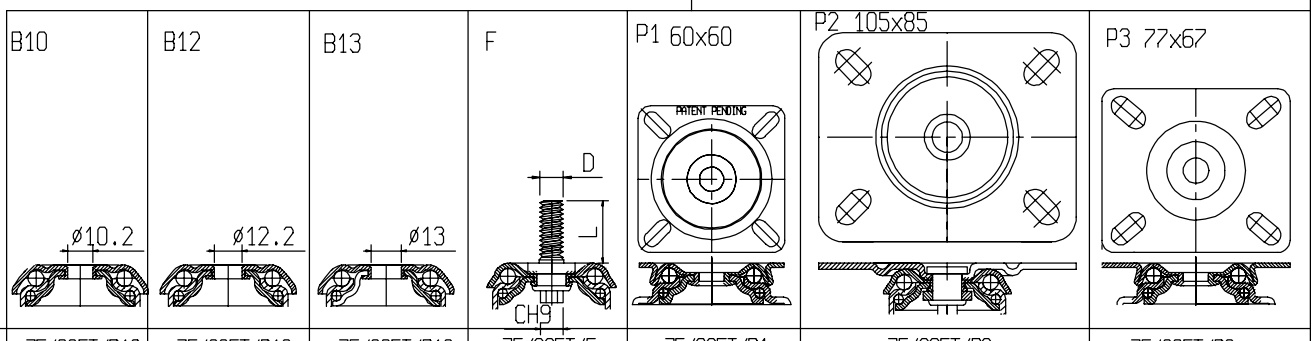

ITEM	75/30FT/B10	75/30FT/B12	75/30FT/B13	75/30FT/F	75/30FT/P1	75/30FT/P2	75/30FT/P3
H	62	62	62	62	62	64.5	62
F	96.5	96.5	96.5	96.5	96.5	96.5	96.5
daN S	75	75	75	75	75	75	75
gr	289	289	289	321	324	470	344

ITEM	80/30FT/B10	80/30FT/B12	80/30FT/B13	80/30FT/F	80/30FT/P1	80/30FT/P2	80/30FT/P3
H	62	62	62	62	62	64.5	62
F	96.5	96.5	96.5	96.5	96.5	96.5	96.5
daN S	75	75	75	75	75	75	75
gr	289	289	289	321	324	470	344

ITEM	100/30FT/B10	100/30FT/B12	100/30FT/B13	100/30FT/F	100/30FT/P1	100/30FT/P2	100/30FT/P3
H	73	73	73	73	73	75.5	73
F	99.5	99.5	99.5	99.5	99.5	99.5	99.5
daN S	75	75	75	75	75	75	75
gr	315	315	315	342	343	489	363

ITEM	125/30FT/B10	125/30FT/B12	125/30FT/B13	125/30FT/F	125/30FT/P1	125/30FT/P2	125/30FT/P3
H	87.5	87.5	87.5	87.5	87.5	90	87.5
F	110	110	110	110	110	110	110
daN S	-	-	-	-	-	-	-
gr	326	326	326	355	355	501	375

* La portata statica indicata per i soli supporti corrisponde a 1.5 portata dinamica verificata secondo UNI 12527 montando una ruota in Nylon

* The static load capacity mentioned for the only forks correspond to 1.5 of dynamic load capacity checked accoding to UNI 12527 assembling with a nylon wheel

Supporti girevoli con freno serie 30FT per i vari Diametri di Ruote e Gamma di Fissaggi
Swivel forks with brake of the 30FT series for the various wheels diameters and fixings range

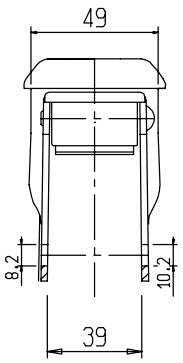

Espansori Expanders

	Ø	18	19	22	25	28
EL+		-	-	-	-	-
	⌀	21	26	31	-	-
EL+		-	-	-	-	-

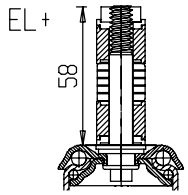

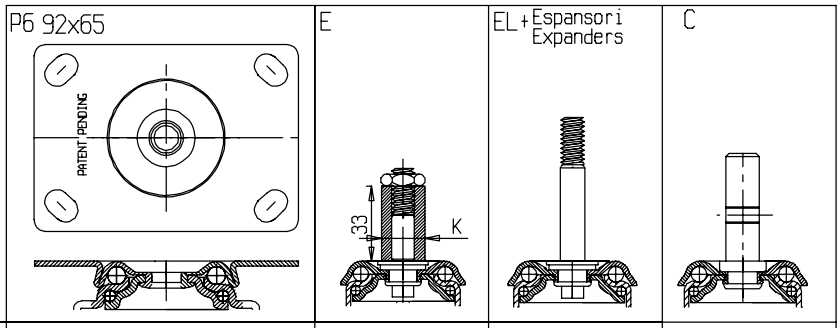

ITEM	75/30FT/P6	75/30FT/E	75/30FT/EL	75/30FT/C
H	62	62	62	62
B	96.5	96.5	96.5	96.5
daN S	75	75	75	75
gr	359	339	357	348

ITEM	80/30FT/P6	80/30FT/E	80/30FT/EL	80/30FT/C
H	62	62	62	62
B	96.5	96.5	96.5	96.5
daN S	75	75	75	75
gr	359	339	357	348

ITEM	100/30FT/P6	100/30FT/E	100/30FT/EL	100/30FT/C
H	73	73	73	73
B	99.5	99.5	99.5	99.5
daN S	75	75	75	75
gr	386	344	354	378

ITEM	125/30FT/P6	125/30FT/E	125/30FT/EL	125/30FT/C
H	87.5	87.5	87.5	87.5
B	110	110	110	110
daN S	-	-	-	-
gr	398	378	388	389

Complessivi girevoli Serie 60 - 65/30 nelle varie tipologie di fissaggi, ruote assemblate

Swivel castors 60 - 65/30 Series in the different types of fixings, assembled wheels

Requisiti dei Complessivi assemblati alle varie Ruote Requirements of the castors assembled with different wheels		PU	N
Portata Dinamica conforme UNI EN 12527 Dynamic load capacity conform UNI EN 12527	daN D	100	70
Portata Statica conforme UNI EN 12527 Static load capacity conform UNI EN 12527	daN S	150	105

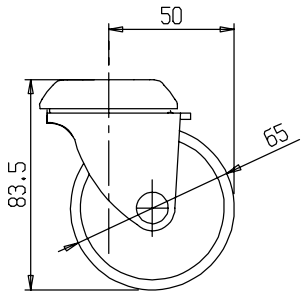

P2 ALTEZZA + 2.5 mm.
P2 HEIGHT + 2.5 mm

	B10	B12	B13	F	P1 60x60	P2 105x85	P3 77x67
gr = Peso per 1 pezzo gr = Weight for a piece	ø10.2	ø12.2	ø13	D, L, CH9	PATENT PENDING		
60PU ITEM	60/30/PUB10	60/30/PUB12	60/30/PUB13	60/30/PUF	60/30/PUP1	60/30/PUP2	60/30/PUP3
gr	-	-	-	-	-	-	-
65N ITEM	65/30/NB10	65/30/NB12	65/30/NB13	65/30/NF	65/30/NP1	65/30/NP2	65/30/NP3
gr	276	276	276	302	305	451	323

Complessivi girevoli Serie 60 - 65/30 nelle varie tipologie di fissaggi, ruote assemblate
Swivel castors 60 - 65/30 Series in the different tues of fixings, assembled wheels

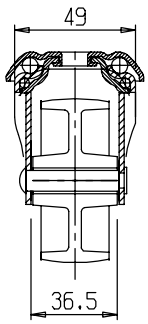

Espansori Expanders

	Ø	18	19	22	25	28
EL+		-	-	-	-	-
	⌀	21	26	31	-	-
EL+		-	-	-	-	-

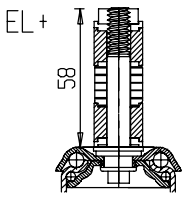

	P6 92x65	E	EL+ Espansori Expanders	C
ITEM	60/30/PUP6	60/30/PUE	60/30/PUEL	60/30/PUC
gr	-	-	-	-
ITEM	65/30/NP6	65/30/NEL	65/30/NEL	65/30/NC
gr	351	324	334	339

Complessivi Girevoli Serie 75/30 nelle varie tipologie di:Fissaggi,Ruote assemblati

Swivel castors of the 75/30 series with different types of fixings, assembled wheels

Requisiti dei Complessivi assemblati alle varie Ruote Requirements of the castors assembled with the different wheels		G	Gd	Gc	PU	GdA	GcA	N
Portata Dinamica conforme UNI EN 12527 Dynamic load capacity conform UNI EN 12527	daN D	80	80	80	100	-	-	50
Portata Statica conforme UNI EN 12527 Static load capacity conform UNI EN 12527	daN S	120	120	120	150	-	-	75
Conducibilita'Elettrica conforme UNI EN 12527 Electric conductivity in compliance in with UNI EN 12527	Ω hom					< 10.000		

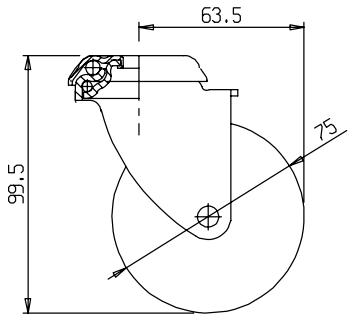

P2 ALTEZZA + 2.5 mm.
P2 HEIGHT + 2.5 mm

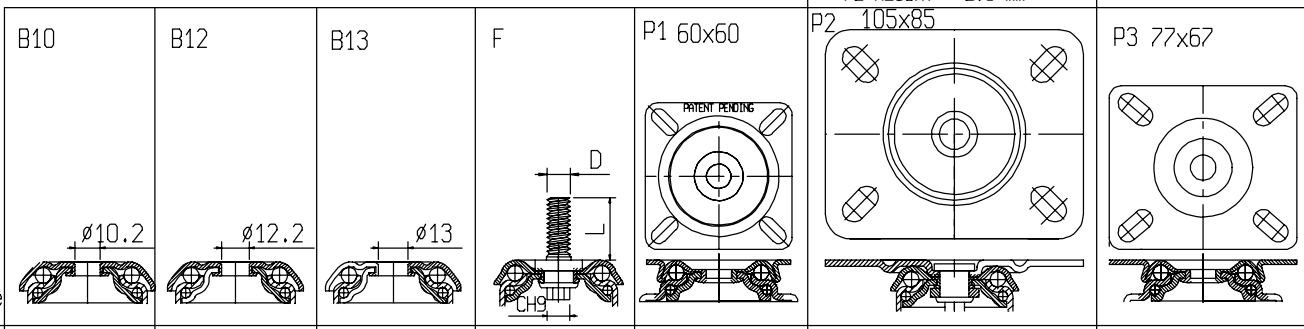

gr = Peso per 1 pezzo

gr = Weight for a piece

	ITEM	B10	B12	B13	F	P1 60x60	P2 105x85	P3 77x67
75G	ITEM	75/30/GB10	75/30/GB12	75/30/GB13	75/30/GF	75/30/GP1	75/30/GP2	75/30/GP3
	gr	391	391	391	417	420	566	438
75Gd	ITEM	75/30/GdB10	75/30/GdB12	75/30/GdB13	75/30/GdF	75/30/GdP1	75/30/GdP2	75/30/GdP3
	gr	405	405	405	431	434	580	452
75Gc	ITEM	75/30/GcB10	75/30/GcB12	75/30/GcB13	75/30/GcF	75/30/GcP1	75/30/GcP2	75/30/GcP3
	gr	444	444	444	470	473	619	491
75PU	ITEM	75/30/PUB10	75/30/PUB12	75/30/PUB13	75/30/PUF	75/30/PUP1	75/30/PUP2	75/30/PUP3
	gr	-	-	-	-	-	-	-
75GdA	ITEM	75/30/GdAB10	75/30/GdAB12	75/30/GdAB13	75/30/GdAF	75/30/GdAP1	75/30/GdAP2	75/30/GdAP3
	gr	405	405	405	431	434	580	452
75GcA	ITEM	75/30/GcAB10	75/30/GcAB12	75/30/GcAB13	75/30/GcAF	75/30/GcAP1	75/30/GcAP2	75/30/GcAP3
	gr	444	444	444	470	473	619	491
75N	ITEM	75/30/NB10	75/30/NB12	75/30/NB13	75/30/NF	75/30/NP1	75/30/NP2	75/30/NP3
	gr	299	299	299	325	328	474	346

Complessivi Girevoli Serie 75/30 nelle varie tipologie di:Fissaggi,Ruote assemblati
Swivel castors of the 75/30 series with different types of fixings, assembled wheels

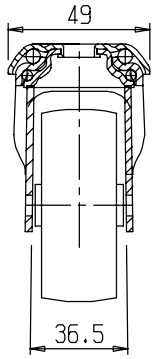

Espansori Expanders

	Ø	18	19	22	25	28
EL+		-	-	-	-	-
	⌀	21	26	31	-	-
EL+		-	-	-	-	-

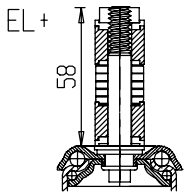

	P6 92x65	E	EL+ Espansori Expanders	C
	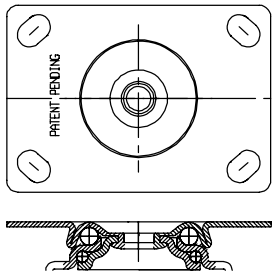	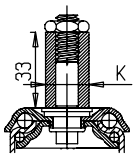	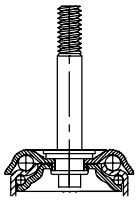	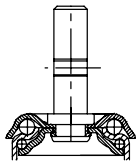
ITEM	75/30/GP6	75/30/GE	75/30/GEL	75/30/GC
gr	466	440	450	454
ITEM	75/30/GdP6	75/30/GdE	75/30/GdEL	75/30/GdC
gr	480	453	463	468
ITEM	75/30/GcP6	75/30/GcE	75/30/GcEL	75/30/GcC
gr	519	493	503	507
ITEM	75/30/PUP6	75/30/PUE	75/30/PUEL	75/30/PUC
gr	-	-	-	-
ITEM	75/30/GdAP6	75/30/GdAE	75/30/GdAEL	75/30/GdAC
gr	480	453	463	468
ITEM	75/30/GcAP6	75/30/GcAE	75/30/GcAEL	75/30/GcAC
gr	519	493	503	507
ITEM	75/30/NP6	75/30/NE	75/30/NEL	75/30/NC
gr	374	347	357	362

Complessivi Girevoli Serie 80/30 nelle varie tipologie di:Fissaggi,Ruote assemblati
Swivel castors of the 80/30 series with different types of fixings, assembled wheels

Requisiti dei Complessivi assemblati alle varie Ruote Requirements of the castors assembled with the different wheels		G	Gd	Gc	GdA	GcA	N
Portata Dinamica conforme UNI EN 12527 Dynamic load capacity conform UNI EN 12527	daN D	85	85	85	-	-	50
Portata Statica conforme UNI EN 12527 Static load capacity conform UNI EN 12527	daN S	127.5	127.5	127.5	-	-	75
Conducibilita'Elettrica conforme UNI EN 12527 Electric conductivity in compliance with UNI EN 12527	Ω hom				< 10.000		

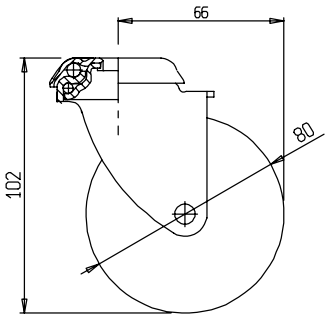

P2 ALTEZZA + 2.5mm
P2 HEIGHT + 2.5mm

	B10	B12	B13	F	P1 60x60	P2 105x85	P3 77x67
gr = Peso per 1 pezzo gr = Weight for a piece	ø10.2	ø12.2	ø13	D, L, CH9	PATENT PENDING		

80G	ITEM	80/30/GB10	80/30/GB12	80/30/GB13	80/30/GF	80/30/GP1	80/30/GP2	80/30/GP3
	gr	417	417	417	442	446	592	464
80Gd	ITEM	80/30/GdB10	80/30/GdB12	80/30/GdB13	80/30/GdF	80/30/GdP1	80/30/GdP2	80/30/GdP3
	gr	430	430	430	456	459	605	477
80Gc	ITEM	80/30/GcB10	80/30/GcB12	80/30/GcB13	80/30/GcF	80/30/GcP1	80/30/GcP2	80/30/GcP3
	gr	462	462	462	494	491	637	509
80GdA	ITEM	80/30/GdAB10	80/30/GdAB12	80/30/GdAB13	80/30/GdAF	80/30/GdAP1	80/30/GdAP2	80/30/GdAP3
	gr	430	430	430	456	459	605	477
80GcA	ITEM	80/30/GcAB10	80/30/GcAB12	80/30/GcAB13	80/30/GcAF	80/30/GcAP1	80/30/GcAP2	80/30/GcAP3
	gr	462	462	462	494	491	637	509
80N	ITEM	80/30/NB10	80/30/NB12	80/30/NB13	80/30/NF	80/30/NP1	80/30/NP2	80/30/NP3
	gr	316	316	316	341	345	491	363

ITEM	80/30/G-Gd-GA	ITEM	80/30/N	ITEM	80/30/G-Gd-Gc
	con Asse Rivettato With riveted axle		con Asse a Vite With screw axle		Nucleo Grigio Grey Centre
	-		-		-

Complessivi Girevoli Serie 80/30 nelle varie tipologie di:Fissaggi,Ruote assemblati
Swivel castors of the 80/30 series with different types of fixings, assembled wheels

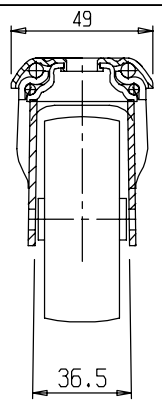

Espansori Expanders

	Ø	18	19	22	25	28
EL+		-	-	-	-	-
	⌀	21	26	31	-	-
EL+		-	-	-	-	-

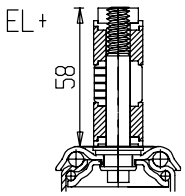

	P6 92x65	E	EL+ Espansori Expanders	C
	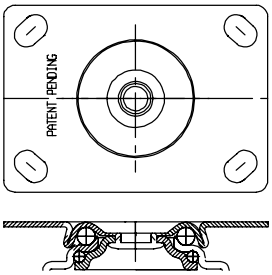	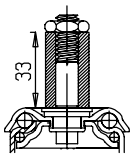	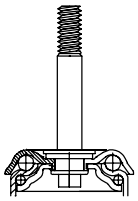	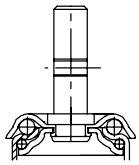
ITEM	80/30/GP6	80/30/GE	80/30/GEL	80/30/GC
gr	492	465	475	480
ITEM	80/30/GdP6	80/30/GdE	80/30/GdEL	80/30/GdC
gr	505	478	488	493
ITEM	80/30/GcP6	80/30/GcE	80/30/GcEL	80/30/GcC
gr	537	510	520	525
ITEM	80/30/GdAP6	80/30/GdAE	80/30/GdAEL	80/30/GdAC
gr	505	478	488	493
ITEM	80/30/GcAP6	80/30/GcAE	80/30/GcAEL	80/30/GcAC
gr	537	510	520	525
ITEM	80/30/NP6	80/30/NE	80/30/NEL	80/30/NC
gr	391	364	374	379

Complessivi Girevoli Serie 100/30 nelle varie tipologie di:Fissaggi,Ruote assemblati
Swivel castors of the 100/30 series with different types of fixings, assembled wheels

Requisiti dei Complessivi assemblati alle varie Ruote Requirements of the castors assembled with the different wheels		G	Gd	GCC	GdA	GCCA	SR	N
Portata Dinamica conforme UNI EN 12527 Dynamic load capacity conform UNI EN 12527	daN D	100	100	100	-	-	-	50
Portata Statica conforme UNI EN 12527 Static load capacity conform UNI EN 12527	daN S	150	150	150	-	-	-	75
Conducibilita'Elettrica conforme UNI EN 12527 Electric conductivity in compliance with UNI EN 12527	hom				< 10.000			

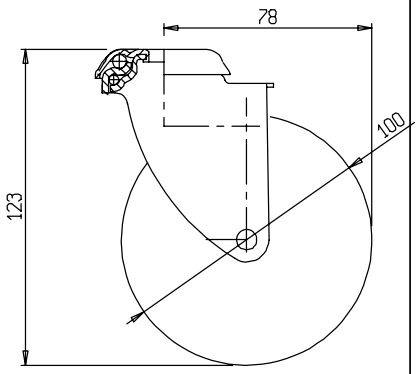

gr = Peso per 1 pezzo
gr = Weight for a piece

P2 ALTEZZA + 2.5 mm.
P2 HEIGHT + 2.5 mm

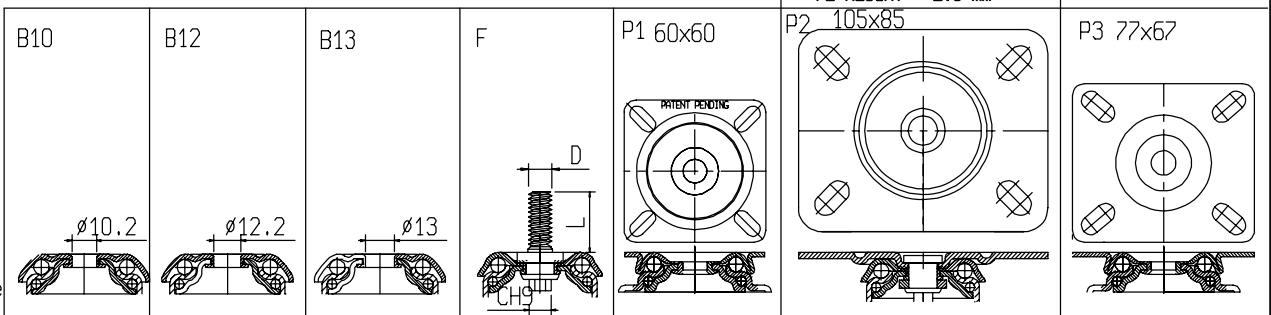

	ITEM	B10	B12	B13	F	P1 60x60	P2 105x85	P3 77x67
100G		100/30/GB10	100/30/GB12	100/30/GB13	100/30/GF	100/30/GP1	100/30/GP2	100/30/GP3
	gr	505	505	505	532	534	680	552
100Gd		100/30/GdB10	100/30/GdB12	100/30/GdB13	100/30/GdF	100/30/GdP1	100/30/GdP2	100/30/GdP3
	gr	556	556	556	582	585	731	603
100GCC		100/30/GCCB10	100/30/GCB12	100/30/GCCB13	100/30/GCCF	100/30/GCCP1	100/30/GCCP2	100/30/GCCP3
	gr	548	548	548	574	577	723	595
100GdA		100/30/GdAB10	100/30/GdAB12	100/30/GdAB13	100/30/GdAF	100/30/GdAP1	100/30/GdAP2	100/30/GdAP3
	gr	556	556	556	582	585	731	603
100GCCA		100/30/GCCAB10	100/30/GCCAB12	100/30/GCCAB13	100/30/GCCAF	100/30/GCCAP1	100/30/GCCAP2	100/30/GCCAP3
	gr	511	511	511	537	540	686	558
100SR		100/30/SRB10	100/30/SRB12	100/30/SRB13	100/30/SRF	100/30/SRP1	100/30/SRP2	100/30/SRP3
	gr	382	382	382	407	411	557	429
100N		100/30/NB10	100/30/NB12	100/30/NB13	100/30/NF	100/30/NP1	100/30/NP2	100/30/NP3
	gr	362	362	362	387	391	537	409

Complessivi Girevoli Serie 100/30 nelle varie tipologie di:Fissaggi,Ruote assemblati
Swivel castors of the 100/30 series with different types of fixings, assembled wheels

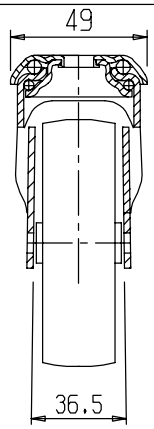

Espansori Expanders

	Ø	18	19	22	25	28
EL+		-	-	-	-	-
	⌀	21	26	31	-	-
EL+		-	-	-	-	-

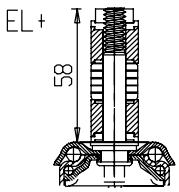

	P6 92x65	E	EL+ Espansori Expanders	C
	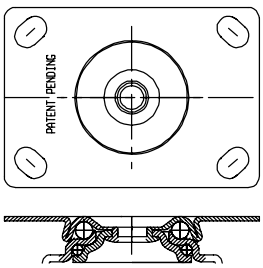	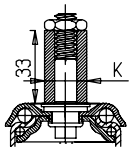	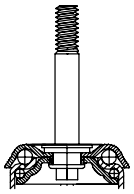	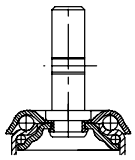
ITEM	100/30/GP6	100/30/GE	100/30/GEL	100/30/GC
gr	580	553	563	568
ITEM	100/30/GdP6	100/30/GdE	100/30/GdEL	100/30/GdC
gr	631	610	620	625
ITEM	100/30/GCCP6	100/30/GCCE	100/30/GCCEL	100/30/GCCC
gr	623	596	606	611
ITEM	100/30/GdAP6	100/30/GdAE	100/30/GdAEL	100/30/GdAC
gr	631	610	620	625
ITEM	100/30/GCCAP6	100/30/GCCAE	100/30/GCCAEL	100/30/GCCAC
gr	586	559	569	574
ITEM	100/30/SRP6	100/30/SRE	100/30/SREL	100/30/SRC
gr	457	430	440	445
ITEM	100/30/NP6	100/30/NE	100/30/NEL	100/30/NC
gr	437	410	420	425

Complessivi Girevoli Serie 125/30 nelle varie tipologie di:Fissaggi,Ruote assemblati
Swivel castors of the 125/30 series with different types of fixings, assembled wheels

Requisiti dei Complessivi assemblati alle varie Ruote Requirements of the castors assembled with the different wheels		G	Gd	GCC	GdA	GCCA	SR	SRd	N
Portata Dinamica conforme UNI EN 12527 Dynamic load capacity conform UNI EN 12527	daN D	100	100	100	-	-	-	-	45
Portata Statica conforme UNI EN 12527 Static load capacity conform UNI EN 12527	daN S	150	150	150	-	-	-	-	67.5
Conducibilita'Elettrica conforme UNI EN 12527 Electric conductivity in compliance with UNI EN 12527	Ω hom				< 10.000				

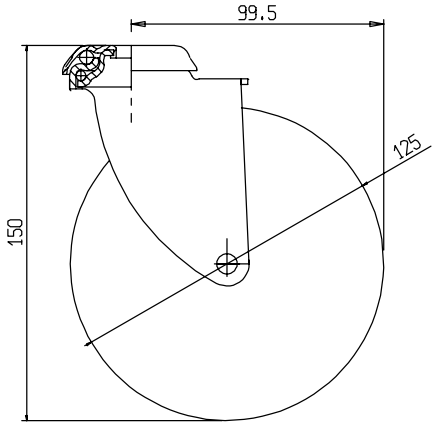

P2 ALTEZZA + 2.5 mm.
P2 HEIGHT + 2.5 mm

gr = Peso per 1 pezzo
gr = Weight for a piece

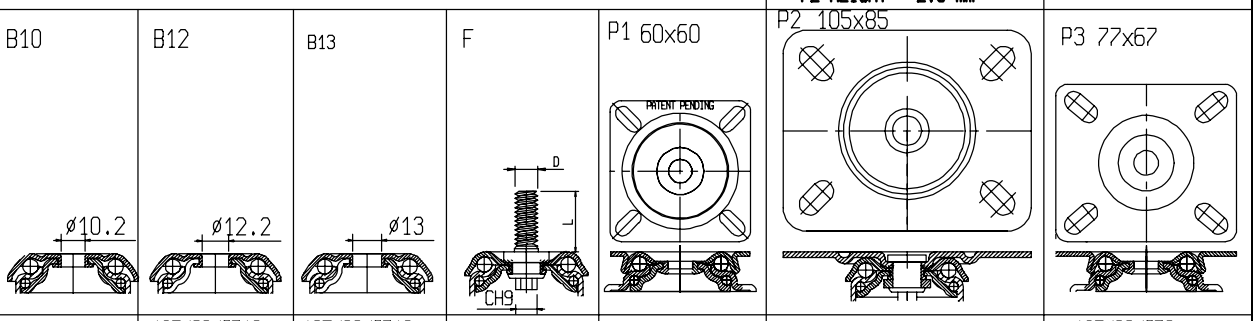

	ITEM	B10	B12	B13	F	P1 60x60	P2 105x85	P3 77x67
125G	ITEM	125/30/GB10	125/30/GB12	125/30/GB13	125/30/GF	125/30/GP1	125/30/GP2	125/30/GP3
	gr	609	609	609	638	638	784	656
125Gd	ITEM	125/30/GdB10	125/30/GdB12	125/30/GdB13	125/30/GdF	125/30/GdP1	125/30/GdP2	125/30/GdP3
	gr	650	650	650	679	679	825	697
125GCC	ITEM	125/30/GCCB10	125/30/GCCB12	125/30/GCCB13	125/30/GCCF	125/30/GCCP1	125/30/GCCP2	125/30/GCCP3
	gr	661	661	661	690	690	836	708
125GdA	ITEM	125/30/GdAB10	125/30/GdAB12	125/30/GdAB13	125/30/GdAF	125/30/GdAP1	125/30/GdAP2	125/30/GdAP3
	gr	650	650	650	679	679	825	697
125GCCA	ITEM	125/30/GCCAB10	125/30/GCCAB12	125/30/GCCAB13	125/30/GCCAF	125/30/GCCAP1	125/30/GCCAP2	125/30/GCCAP3
	gr	596	596	596	625	625	771	643
125SR	ITEM	125/30/SRB10	125/30/SRB12	125/30/SRB13	125/30/SRF	125/30/SRP1	125/30/SRP2	125/30/SRP3
	gr	400	400	400	490	429	575	447
125SRd	ITEM	125/30/SRdB10	125/30/SRdB12	125/30/SRdB13	125/30/SRdF	125/30/SRdP1	125/30/SRdP2	125/30/SRdP3
	gr	441	441	441	531	470	616	488
125N	ITEM	125/30/NB10	125/30/NB12	125/30/NB13	125/30/NF	125/30/NP1	125/30/NP2	125/30/NP3
	gr	380	380	380	470	409	555	427

Complessivi Girevoli Serie 125/30 nelle varie tipologie di:Fissaggi,Ruote assemblati
Swivel castors of the 125/30 series with different types of fixings, assembled wheels

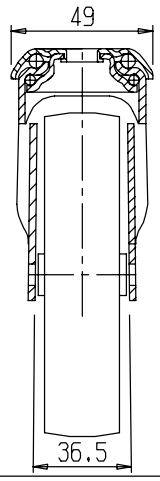

Espansori Expanders

	Ø	18	19	22	25	28
EL+		-	-	-	-	-
	⌀	21	26	31	-	-
EL+		-	-	-	-	-

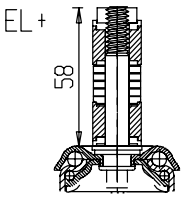

	P6 92x65	E	EL+ Espansori Expanders	C
	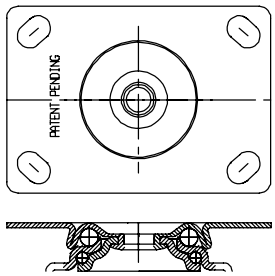	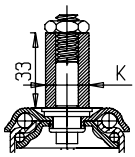	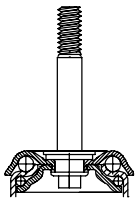	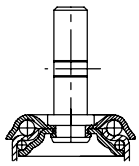
ITEM	125/30/GP6	125/30/GE	125/30/GEL	125/30/GC
gr	681	661	671	672
ITEM	125/30/GdP6	125/30/GdE	125/30/GdEL	125/30/GdC
gr	722	702	712	713
ITEM	125/30/GCCP6	125/30/GCCE	125/30/GCCEL	125/30/GCCC
gr	733	713	723	724
ITEM	125/30/GdAP6	125/30/GdAE	125/30/GdAEL	125/30/GdAC
gr	722	702	712	713
ITEM	125/30/GCCAP6	125/30/GCCAE	125/30/GCCAEL	125/30/GCCAC
gr	668	648	658	659
ITEM	125/30/SRP6	125/30/SRE	125/30/SREL	125/30/SRC
gr	472	452	462	463
ITEM	125/30/SRdP6	125/30/SRdE	125/30/SRdEL	125/30/SRdC
gr	513	493	503	504
ITEM	125/30/NP6	125/30/NE	125/30/NEL	125/30/NC
gr	452	432	442	443

Complessivi Girevoli Dotati di Freno Serie 75/30FT nelle varie tipologie di:Fissaggi,Ruote assemblati
Swivel castors with brake of the 75/30FT series with different types of fixings, assembled wheels

Requisiti dei Complessivi assemblati alle varie Ruote Requirements of the castors assembled with the different wheels		G	Gd	Gc	PU	GdA	GcA	N
Portata Dinamica conforme UNI EN 12527 Dynamic load capacity conform UNI EN 12527	daN D	80	80	80	100	-	-	50
Portata Statica conforme UNI EN 12527 Static load capacity conform UNI EN 12527	daN S	120	120	120	150	-	-	75
Resistenza Passiva del Dispositivo Frenante Conforme UNI EN 12527 Passive resistance of braking device compliance with UNI EN 12527	daN FT							
Conducibilita'Elettrica conforme UNI EN 12527 Electric conductivity in compliance with UNI EN 12527	Ω hom					< 10.000		

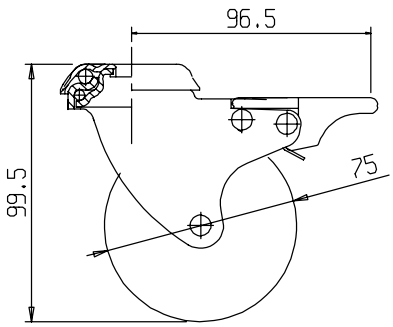

P2 ALTEZZA + 2.5 mm.
P2 HEIGHT + 2.5 mm

gr = Peso per 1 pezzo
gr = Weight for a piece

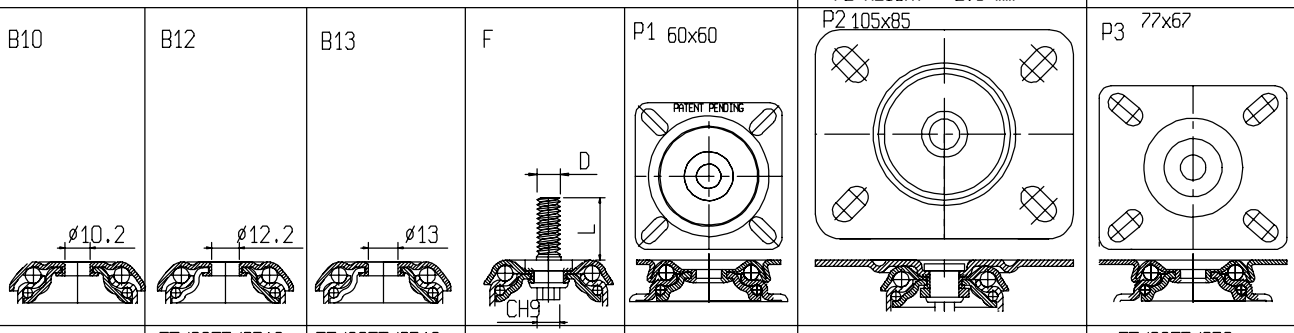

	ITEM	B10	B12	B13	F	P1 60x60	P2 105x85	P3 77x67
75G	ITEM	75/30FT/GB10	75/30FT/GB12	75/30FT/GB13	75/30FT/GF	75/30FT/GP1	75/30FT/GP2	75/30FT/GP3
	gr	458	458	458	485	485	572	503
75Gd	ITEM	75/30FT/GdB10	75/30FT/GdB12	75/30FT/GdB13	75/30FT/GdF	75/30FT/GdP1	75/30FT/GdP2	75/30FT/GdP3
	gr	470	470	470	499	499	586	517
75Gc	ITEM	75/30FT/GcB10	75/30FT/GcB12	75/30FT/GcB13	75/30FT/GcF	75/30FT/GcP1	75/30FT/GcP2	75/30FT/GcP3
	gr	509	509	509	538	538	625	556
75PU	ITEM	75/30FT/PUB10	75/30FT/PUB12	75/30FT/PUB13	75/30FT/PUF	75/30FT/PUP1	75/30FT/PUP2	75/30FT/PUP3
	gr	509	509	509	538	538	625	556
75GdA	ITEM	75/30FT/GdAB10	75/30FT/GdAB12	75/30FT/GdAB13	75/30FT/GdAF	75/30FT/GdAP1	75/30FT/GdAP2	75/30FT/GdAP3
	gr	470	470	470	499	499	586	517
75GcA	ITEM	75/30FT/GcAB10	75/30FT/GcAB12	75/30FT/GcAB13	75/30FT/GcAF	75/30FT/GcAP1	75/30FT/GcAP2	75/30FT/GcAP3
	gr	509	509	509	538	538	625	556
75N	ITEM	75/30FT/NB10	75/30FT/NB12	75/30FT/NB13	75/30FT/NF	75/30FT/NP1	75/30FT/NP2	75/30FT/NP3
	gr	364	364	364	393	393	480	411

Complessivi Girevoli Dotati di Freno Serie 75/30FT nelle varie tipologie di:Fissaggi,Ruote assemblati
Swivel castors with brake of the 75/30FT series with different types of fixings, assembled wheels

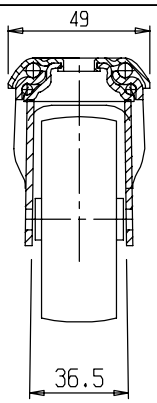

Espansori Expanders

	Ø	18	19	22	25	28
EL+		-	-	-	-	-
	⌀	21	26	31	-	-
EL+		-	-	-	-	-

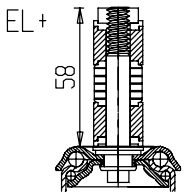

	P6 92x65	E	EL+ Espansori Expanders	C
	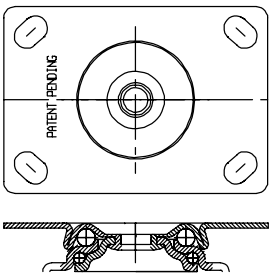	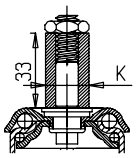	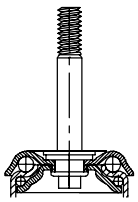	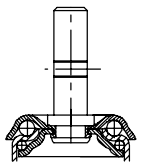
ITEM	75/30FT/GP6	75/30FT/GE	75/30FT/GEL	75/30FT/GC
gr	531	504	514	519
ITEM	75/30FT/GdP6	75/30FT/GdE	75/30FT/GdEL	75/30FT/GdC
gr	545	518	528	533
ITEM	75/30FT/GcP6	75/30FT/GcE	75/30FT/GcEL	75/30FT/GcC
gr	584	557	567	572
ITEM	75/30FT/PUP6	75/30FT/PUE	75/30FT/PUEL	75/30FT/PUC
gr	-	-	-	-
ITEM	75/30FT/GdAP6	75/30FT/GdAE	75/30FT/GdAEL	75/30FT/GdAC
gr	-	-	-	-
ITEM	75/30FT/GcAP6	75/30FT/GcAE	75/30FT/GcAEL	75/30FT/GcAC
gr	-	-	-	-
ITEM	75/30FT/NP6	75/30FT/NE	75/30FT/NEL	75/30FT/NC
gr	439	412	422	427

Complessivi Girevoli Dotati di Freno Serie 80/30FT nelle varie tipologie di:Fissaggi,Ruote assemblati
Swivel castors with brake the 80/30FT series with different types of fixings, assembled wheels

Requisiti dei Complessivi assemblati alle varie Ruote Requirements of the castors assembled with the different wheels		G	Gd	Gc	GdA	GcA	N
Portata Dinamica conforme UNI EN 12527 Dynamic load capacity conform UNI EN 12527	daN D	85	85	85	-	-	50
Portata Statica conforme UNI EN 12527 Static load capacity conform UNI EN 12527	daN S	127.5	127.5	127.5	-	-	75
Resistenza Passiva del Dispositivo Frenante Conforme UNI EN 12527 Passive resistance of braking device in compliance with UNI EN 12527	daN FT	-	-	-	-	-	-
Conducibilita'Elettrica conforme UNI EN 12527 Electric conductivity in compliance with UNI EN 12527	Ω hom				< 10.000		

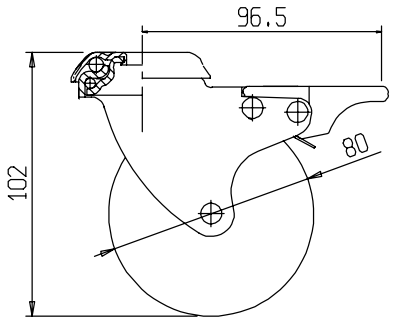

P2 ALTEZZA + 2.5 mm.
P2 HEIGHT + 2.5 mm

gr = Peso per 1 pezzo
gr = Weight for a piece

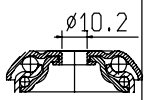

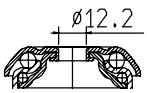

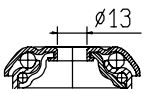

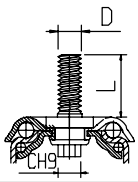

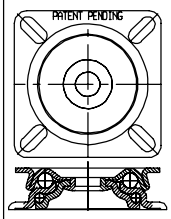

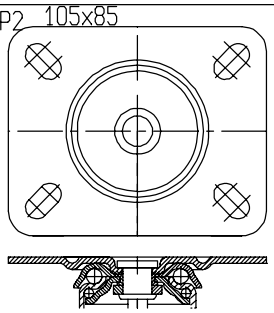

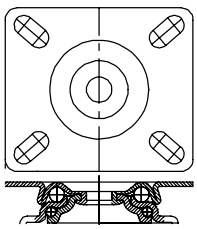

		B10	B12	B13	F	P1 60x60	P2 105x85	P3 77x67
80G	ITEM	80/30FT/GB10	80/30FT/GB12	80/30FT/GB13	80/30FT/GF	80/30FT/GP1	80/30FT/GP2	80/30FT/GP3
	gr	488	488	488	516	517	652	583
		-	-	-	-	-	-	-
80Gd	ITEM	80/30FT/GdB10	80/30FT/GdB12	80/30FT/GdB13	80/30FT/GdF	80/30FT/GdP1	80/30FT/GdP2	80/30FT/GdP3
	gr	499	499	499	527	528	663	594
		-	-	-	-	-	-	-
80Gc	ITEM	80/30FT/GcB10	80/30FT/GcB12	80/30FT/GcB13	80/30FT/GcF	80/30FT/GcP1	80/30FT/GcP2	80/30FT/GcP3
	gr	532	532	532	560	561	696	627
		-	-	-	-	-	-	-
80GdA	ITEM	80/30FT/GdAB10	80/30FT/GdAB12	80/30FT/GdAB13	80/30FT/GdAF	80/30FT/GdAP1	80/30FT/GdAP2	80/30FT/GdAP3
	gr	499	499	499	527	528	663	594
		-	-	-	-	-	-	-
80GcA	ITEM	80/30FT/GcAB10	80/30FT/GcAB12	80/30FT/GcAB13	80/30FT/GcAF	80/30FT/GcAP1	80/30FT/GcAP2	80/30FT/GcAP3
	gr	532	532	532	560	561	696	627
		-	-	-	-	-	-	-
80N	ITEM	80/30FT/NB10	80/30FT/NB12	80/30FT/NB13	80/30FT/NF	80/30FT/NP1	80/30FT/NP2	80/30FT/NP3
	gr	386	386	386	414	415	550	481
		-	-	-	-	-	-	-

Complessivi Girevoli Dotati di Freno Serie 80/30FT nelle varie tipologie di:Fissaggi,Ruote assemblati
Swivel castors with brake the 80/30FT series with different types of fixings, assembled wheels

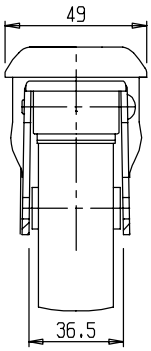

Espansori Expanders

	Ø	18	19	22	25	28
EL+		-	-	-	-	-
	⌀	21	26	31	-	-
EL+		-	-	-	-	-

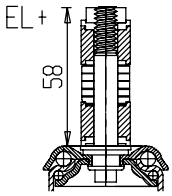

	P6 92x65	E	EL+ Espansori Expanders	C
	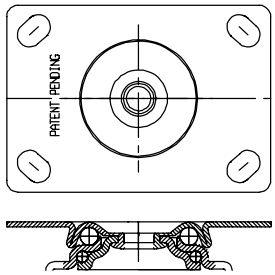	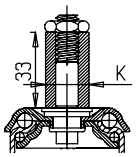	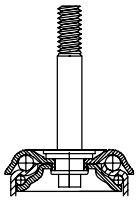	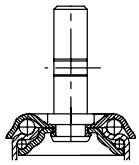
ITEM	80/30FT/GP6	80/30FT/GE	80/30FT/GEL	80/30FT/GC
gr	596	540	550	551

ITEM	80/30FT/GdP6	80/30FT/GdE	80/30FT/GdEL	80/30FT/GdC
gr	607	551	561	562

ITEM	80/30FT/GcP6	80/30FT/GcE	80/30FT/GcEL	80/30FT/GcC
gr	640	584	594	595

ITEM	80/30FT/GdAP6	80/30FT/GdAE	80/30FT/GdAEL	80/30FT/GdAC
gr	607	551	561	562

ITEM	80/30FT/GcAP6	80/30FT/GcAE	80/30FT/GcAEL	80/30FT/GcAC
gr	640	584	594	595

ITEM	80/30FT/NP6	80/30FT/NE	80/30FT/NEL	80/30FT/NC
gr	494	438	448	449

Complessivi Girevoli Dotati di Freno Serie 100/30FT nelle varie tipologie di:Fissaggi,Ruote assemblati
Swivel castors with brake of the 100/30FT series with different types of fixings, assembled wheels

Requisiti dei Complessivi assemblati alle varie Ruote Requirements of the castors assembled with the different wheels		G	Gd	GCC	GdA	GCCA	SR	N
Portata Dinamica conforme UNI EN 12527 Dynamic load capacity conform UNI EN 12527	daN D	100	100	100	-	-	-	50
Portata Statica conforme UNI EN 12527 Static load capacity conform UNI EN 12527	daN S	150	150	150	-	-	-	75
Resistenza Passiva del Dispositivo Frenante Conforme UNI EN 12527 Passive resistance of braking device in compliance with UNI EN 12527	daN FT	-	-	-	-	-	-	-
Conducibilita'Elettrica conforme UNI EN 12527 Electric conductivity in compliance with UNI EN 12527	Ω hom				< 10.000			

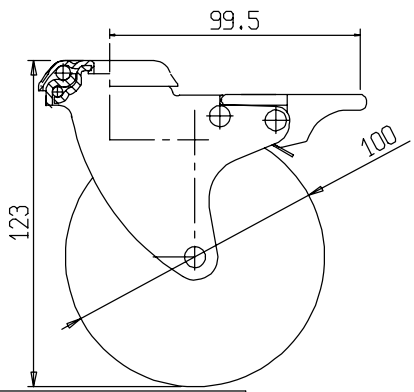

P2 ALTEZZA + 2.5 mm.
P2 HEIGHT + 2.5 mm

gr = Peso per 1 pezzo
gr = Weight for a piece

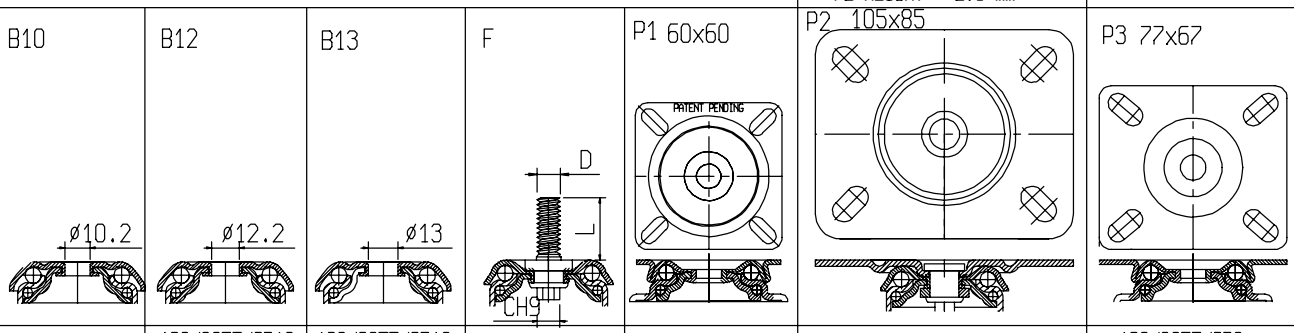

	ITEM	B10	B12	B13	F	P1 60x60	P2 105x85	P3 77x67
100G	ITEM	100/30FT/GB10	100/30FT/GB12	100/30FT/GB13	100/30FT/GF	100/30FT/GP1	100/30FT/GP2	100/30FT/GP3
	gr	579	579	579	607	608	743	667
100Gd	ITEM	100/30FT/GdB10	100/30FT/GdB12	100/30FT/GdB13	100/30FT/GdF	100/30FT/GdP1	100/30FT/GdP2	100/30/GdP3
	gr	630	630	630	658	659	794	718
100GCC	ITEM	100/30FT/GCCB10	100/30FT/GCCB12	100/30FT/GCCB13	100/30FT/GCCF	100/30FT/GCCP1	100/30FT/GCCP2	100/30FT/GCCP3
	gr	623	623	623	650	652	787	711
100GdA	ITEM	100/30FT/GdAB10	100/30FT/GdAB12	100/30FT/GdAB13	100/30FT/GdAF	100/30FT/GdAP1	100/30FT/GdAP2	100/30FT/GdAP3
	gr	630	630	630	658	659	794	718
100GCCA	ITEM	100/30FT/GCCAB10	100/30FT/GCCAB12	100/30FT/GCCAB13	100/30FT/GCCAF	100/30FT/GCCAP1	100/30FT/GCCAP2	100/30FT/GCCAP3
	gr	586	586	586	613	615	750	674
100SR	ITEM	100/30FT/SRB10	100/30FT/SRB12	100/30FT/SRB13	100/30FT/SRF	100/30FT/SRP1	100/30FT/SRP2	100/30FT/SRP3
	gr	456	456	456	481	485	631	503
100N	ITEM	100/30FT/NB10	100/30FT/NB12	100/30FT/NB13	100/30FT/NF	100/30FT/NP1	100/30FT/NP2	100/30FT/NP3
	gr	404	404	404	432	433	568	492

Complessivi Girevoli Dotati di Freno Serie 100/30FT nelle varie tipologie di:Fissaggi,Ruote assemblati
Swivel castors with brake of the 100/30FT series with different types of fixings, assembled wheels

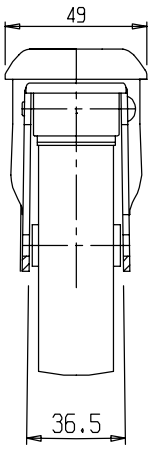

Espansori Expanders

	Ø	18	19	22	25	28
EL+		-	-	-	-	-
	⌀	21	26	31	-	-
EL+		-	-	-	-	-

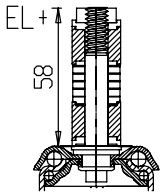

	P6 92x65	E	EL+ Espansori Expanders	C
	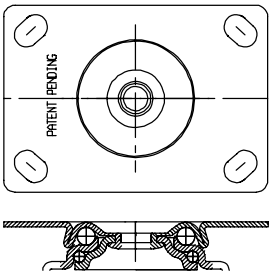	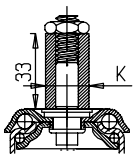	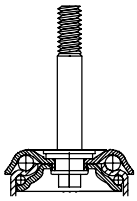	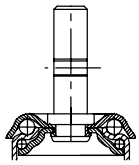
ITEM	100/30FT/GP6	100/30FT/GE	100/30FT/GEL	100/30FT/GC
gr	654	627	637	642

ITEM	100/30FT/GdP6	100/30FT/GE	100/30FT/GdEL	100/30FT/GdC
gr	705	684	694	699

ITEM	100/30FT/GCCP6	100/30FT/GE	100/30FT/GCCEL	100/30FT/GCCC
gr	697	670	680	685

ITEM	100/30FT/GdAP6	100/30FT/GE	100/30FT/GdAEL	100/30FT/GdAC
gr	705	684	694	699

ITEM	100/30FT/GCCAP6	100/30FT/GCCAE	100/30FT/GCCAEL	100/30FT/GCCAC
gr	660	633	643	648

ITEM	100/30FT/SRP6	100/30FT/SRE	100/30FT/SREL	100/30FT/SRC
gr	531	504	514	519

ITEM	100/30FT/NP6	100/30FT/NE	100/30FT/NEL	100/30FT/NC
gr	483	456	466	467

Complessivi Girevoli Dotati di Freno Serie 125/30FT nelle varie tipologie di:Fissaggi,Ruote assemblati

Swivel castors with brake the 125/30FT series with different types of fixing, assembled wheels

Requisiti dei Complessivi assemblati alle varie Ruote Requirements of the castors assembled with the different wheels		G	Gd	GCC	GdA	GCCA	SR	SRd	N
Portata Dinamica conforme UNI EN 12527 Dynamic load capacity conform UNI EN 12527	daN D	100	100	100	-	-	-	-	45
Portata Statica conforme UNI EN 12527 Static load capacity conform UNI EN 12527	daN S	150	150	150	-	-	-	-	67.5
Resistenza Passiva del Dispositivo Frenante Conforme UNI EN 12527 Passive resistance of braking device in compliance with UNI EN 12527	daN FT	-	-	-	-	-	-	-	-
Conducibilita'Elettrica conforme UNI EN 12527 Electric conductivity in compliance with UNI EN 12527	Ω hom				< 10.000				

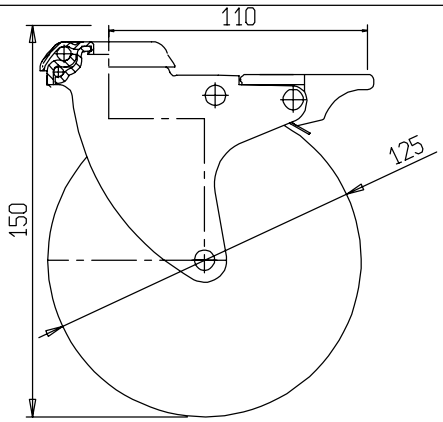

P2 ALTEZZA + 2.5 mm.
P2 HEIGHT + 2.5 mm

gr = Peso per 1 pezzo

gr = Weight for a piece

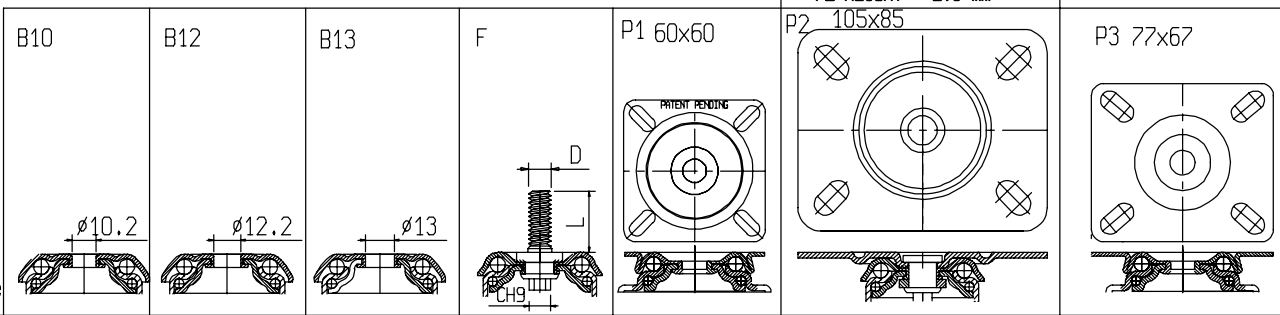

	ITEM	B10	B12	B13	F	P1 60x60	P2 105x85	P3 77x67
125G		125/30FT/GB10	125/30FT/GB12	125/30FT/GB13	125/30FT/GF	125/30FT/GP1	125/30FT/GP2	125/30FT/GP3
	gr	677	677	677	706	706	852	879
125Gd		125/30FT/GdB10	125/30FT/GdB12	125/30FT/GdB13	125/30FT/GdF	125/30FT/GdP1	125/30FT/GdP2	125/30FT/GdP3
	gr	718	718	718	747	747	893	765
125GCC		125/30FT/GCCB10	125/30FT/GCCB12	125/30FT/GCCB13	125/30FT/GCCF	125/30FT/GCCP1	125/30FT/GCCP2	125/30FT/GCCP3
	gr	729	729	729	758	758	904	776
125GdA		125/30FT/GdAB10	125/30FT/GdAB12	125/30FT/GdAB13	125/30FT/GdAF	125/30FT/GdAP1	125/30FT/GdAP2	125/30FT/GdAP3
	gr	718	718	718	747	747	893	765
125GCCA		125/30FT/GCCAB10	125/30FT/GCCAB12	125/30FT/GCCAB13	125/30FT/GCCAF	125/30FT/GCCAP1	125/30FT/GCCAP2	125/30FT/GCCAP3
	gr	664	664	664	693	693	839	711
125SR		125/30FT/SRB10	125/30FT/SRB12	125/30FT/SRB13	125/30FT/SRF	125/30FT/SRP1	125/30FT/SRP2	125/30FT/SRP3
	gr	468	468	468	558	497	643	515
125SRd		125/30FT/SRdB10	125/30FT/SRdB12	125/30FT/SRdB13	125/30FT/SRdF	125/30FT/SRdP1	125/30FT/SRdP2	125/30FT/SRdP3
	gr	509	509	509	599	538	684	556
125N		125/30FT/NB10	125/30FT/NB12	125/30FT/NB13	125/30FT/NF	125/30FT/NP1	125/30FT/NP2	125/30FT/NP3
	gr	490	490	490	519	519	654	578

Complessivi Girevoli Dotati di Freno Serie 125/30FT nelle varie tipologie di:Fissaggi,Ruote assemblati
Swivel castors with brake the 125/30FT series with different types of fixing, assembled wheels

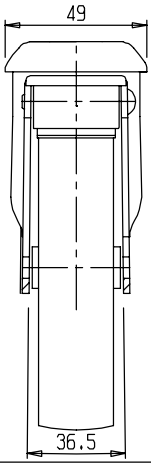

Espansori Expanders

	Ø	18	19	22	25	28
EL+		-	-	-	-	-
	⌀	21	26	31	-	-
EL+		-	-	-	-	-

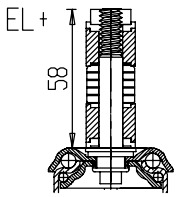

	P6 92x65	E	EL+ Espansori Expanders	C
	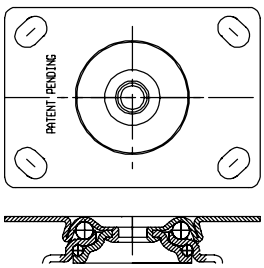	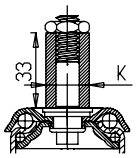	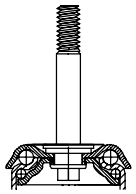	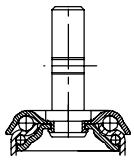
ITEM	125/30FT/GP6	125/30FT/GE	125/30FT/GEL	125/30FT/GC
gr	749	729	739	740

ITEM	125/30FT/GdP6	125/30FT/GdE	125/30FT/GdEL	125/30FT/GdC
gr	790	770	780	781

ITEM	125/30FT/GCCP6	125/30FT/GCCE	125/30FT/GCCEL	125/30FT/GCCC
gr	801	781	791	792

ITEM	125/30FT/GdAP6	125/30FT/GdAE	125/30FT/GdAEL	125/30FT/GdAC
gr	790	770	780	781

ITEM	125/30FT/GCCAP6	125/30FT/GCCAE	125/30FT/GCCAEL	125/30FT/GCCAC
gr	736	716	726	727

ITEM	125/30FT/SRP6	125/30FT/SRE	125/30FT/SREL	125/30FT/SRC
gr	540	520	530	531

ITEM	125/30FT/SRdP6	125/30FT/SRdE	125/30FT/SRdEL	125/30FT/SRdC
gr	581	561	571	572

ITEM	125/30FT/NP6	125/30FT/NE	125/30FT/NEL	125/30FT/NC
gr	598	542	552	553

Supporti fissi Serie 30 per i vari Diametri di Ruote e Gamma di Fissaggi
Fixed forks of the 30 series for the various wheel diameters and fixings range

Materiale: Lamiera ferro secondo standard EN 10130
Trattamanto superficiale,Zincatura passivata UNI ISO 2081
Material: Iron sheet subject to EN 10130
Surface treatment;passivated galvanisation subject to UNI ISO 2081

S Portata statica conforme UNI EN 12527 *
S Static load capacity conform UNI EN 12527 *

gr=Peso per 1 pezzo
gr=Weight for a piece

* La portata statica indicata per i soli supporti corrisponde a 1.5 portata dinamica,verificata secondo UNI 12527 montando una ruota in Nylon

* The static load capacity mentioned for the only forks correspond to 1.5 of dynamic load capacity checked according to UNI 12527 assembling with a nylon wheel

ITEM	65/30/SF	75-80/30/SF	100/30/SF	125/30/SF
H	51	63	74	87.5
S	105	120	120	120
gr	136	162	186	206

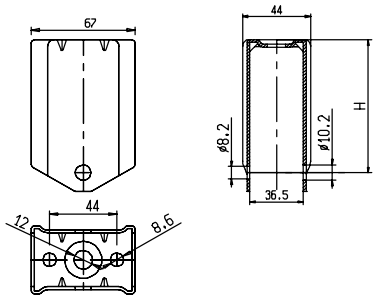

ITEM	65/30/SFF	75-80/30/SFF	100/30/SFF	125/30/SFF
H	51	63	74	87.5
S	105	120	120	120
gr	172	192	222	242

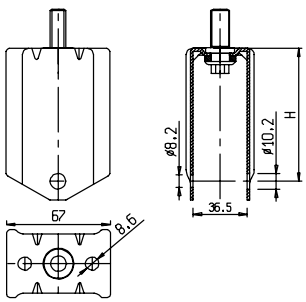

ITEM	65/30/SFP2	75-80/30/SFP2	100/30/SFP2	125/30/SFP2
H	51	63	74	87.5
S	105	120	120	136
gr	317	343	367	387

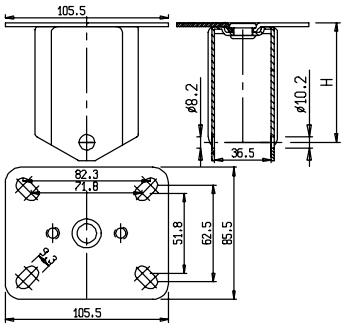

ITEM	65/30/SFP3	75-80/30/SFP3	100/30/SFP3	125/30/SFP3
H	51	63	74	87.5
S	105	120	120	135
gr	261	287	311	331

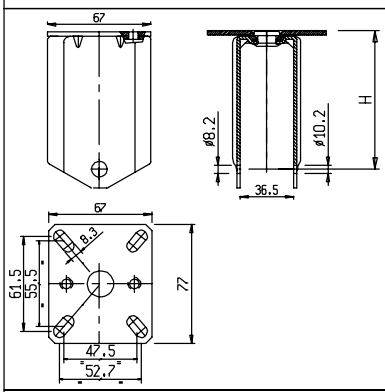

ITEM	65/30/SFP6	75-80/30/SFP6	100/30/SFP6	125/30/SFP6
H	51	63	74	87.5
S	-	-	-	-
gr	265	291	315	335

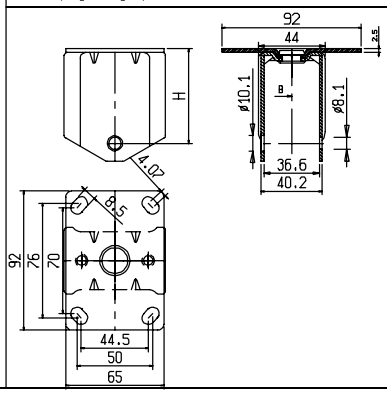

Complessivi Fissi Serie 60 - 65/30 nelle varie tipologie di fissaggi, ruote assemblate
Fixed castors 60 - 65/30 Series in the different types of fixings, assembled wheels

Requisiti dei Complessivi assemblati alle varie Ruote

Requirements of the castors assembled with the different wheels

Portata Dinamica conforme UNI EN 12527 Dynamic load capacity conform UNI EN 12527 daN D	Portata Statica conforme UNI EN 12527 Static load capacity conform UNI EN 12527 daN S	gr = Peso per 1 pezzo gr = Weight for a piece

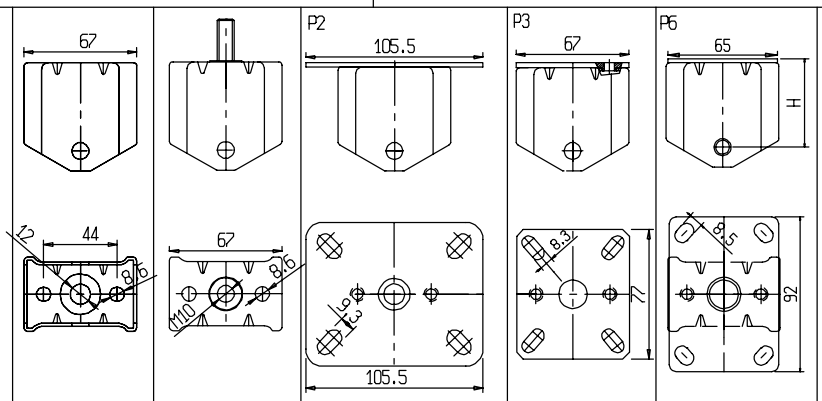

	ITEM	60/30/SFPU	60/30/SFFPU	60/30/SFP2PU	60/30/SFP3PU	60/30/SFP6PU
60PU	H					
	D					
	S					
	gr					
65N	ITEM	65/30/SFN	65/30/SFFN	65/30/SFP2N	65/30/SFP3N	65/30/SFP6N
	H	83.5	83.5	83.5	83.5	83.5
	D	-	-	-	-	-
	S	-	-	-	-	-
	gr	206	242	393	369	373

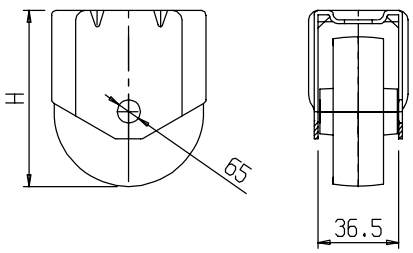

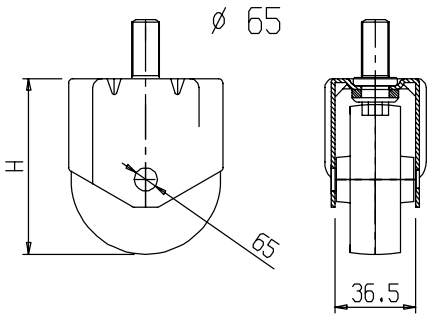

P2-P3-P6

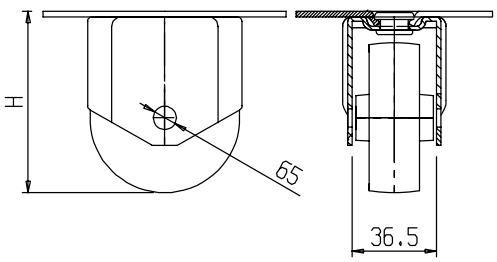

Complessivi fissi serie 75/30 nelle varie tipologie di:Fissaggi,Ruote assemblati

Fixed castors of the 75/30 series with different types of fixings, assembled wheels

Requisiti dei Complessivi assemblati alle varie Ruote

Requirements of the castors assembled with the different wheels

Portata Dinamica conforme UNI EN 12527 Dynamic load capacity conform UNI EN 12527 daN D	Portata Statica conforme UNI EN 12527 Static load capacity conform UNI EN 12527 daN S	gr = Peso per 1 pezzo gr = Weight for a piece

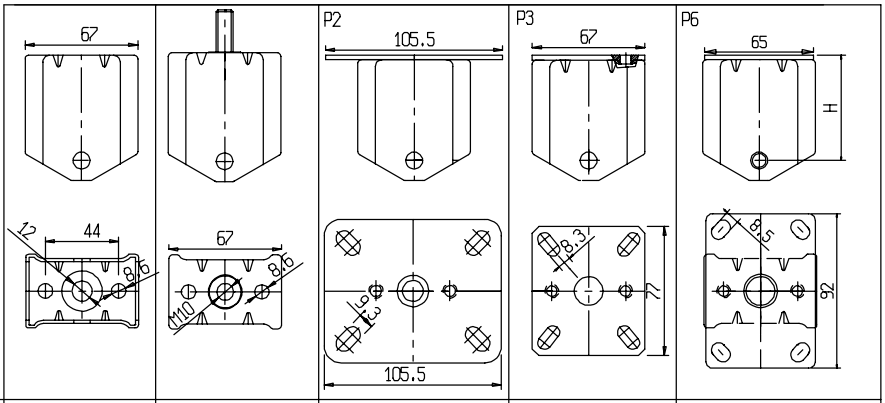

	ITEM	75/30/SFG	75/30/SFFG	75/30/SFP2G	75/30/SFP3G	75/30/SFP6G
75G	H	100.5	100.5	100.5	100.5	100.5
	daN D	70	70	70	70	-
	daN S	105	105	105	105	-
	gr	292	328	479	455	459
75Gd	ITEM	75/30/SFGd	75/30/SFFGd	75/30/SFP2Gd	75/30/SFP3Gd	75/30/SFP6Gd
	H	100.5	100.5	100.5	100.5	100.5
	daN D	70	70	70	70	-
	daN S	105	105	105	105	-
	gr	343	379	330	306	310
75Gc	ITEM	75/30/SFGc	75/30/SFFGc	75/30/SFP2Gc	75/30/SFP3Gc	75/30/SFP6Gc
	H	100.5	100.5	100.5	100.5	100.5
	daN D	70	70	70	70	-
	daN S	105	105	105	105	-
	gr	380	416	567	543	547
75PU	ITEM	75/30/SFPU	75/30/SFFPU	75/30/SFP2PU	75/30/SFP3PU	75/30/SFP6PU
	H	100.5	100.5	100.5	100.5	100.5
	daN D	100	100	100	100	100
	daN S	150	150	150	150	150
	gr	-	-	-	-	-
75GdA	ITEM	75/30/SFGdA	75/30/SFFGdA	75/30/SFP2GdA	75/30/SFP3GdA	75/30/SFP6GdA
	H	100.5	100.5	100.5	100.5	100.5
	daN D	-	-	-	-	-
	daN S	-	-	-	-	-
	gr	-	-	-	-	-
75GcA	ITEM	75/30/SFGcA	75/30/SFFGcA	75/30/SFP2GcA	75/30/SFP3GcA	75/30/SFP6GcA
	H	100.5	100.5	100.5	100.5	100.5
	daN D	-	-	-	-	-
	daN S	-	-	-	-	-
	gr	-	-	-	-	-
75N	ITEM	75/30/SFN	75/30/SFFN	75/30/SFP2N	75/30/SFP3N	75/30/SFP6N
	H	100.5	100.5	100.5	100.5	100.5
	daN D	-	-	-	-	-
	daN S	-	-	-	-	-
	gr	244	280	431	407	411

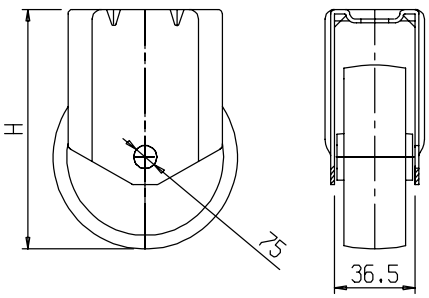

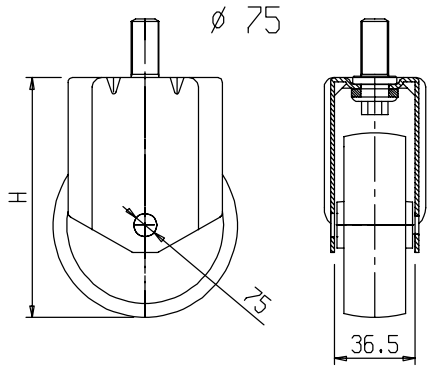

P2-P3-P6

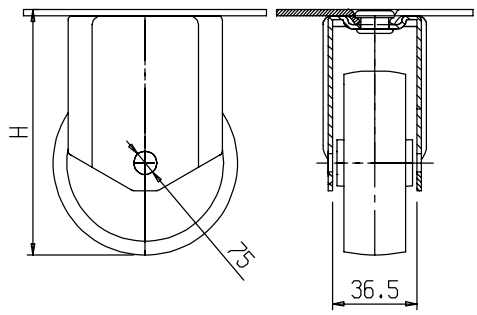

Complessivi fissi serie 80/30 nelle varie tipologie di:Fissaggi,Ruote assemblati
Fixed castors of the 80/30 series with different types of fixings, assembled wheels

Requisiti dei Complessivi assemblati alle varie Ruote
Requirements of the castors assembled with the different wheels

Portata Dinamica conforme UNI EN 12527 Dynamic load capacity conform UNI EN 12527 daN D	Portata Statica conforme UNI EN 12527 Static load capacity conform UNI EN 12527 daN S	gr = Peso per 1 pezzo gr = Weight for a piece

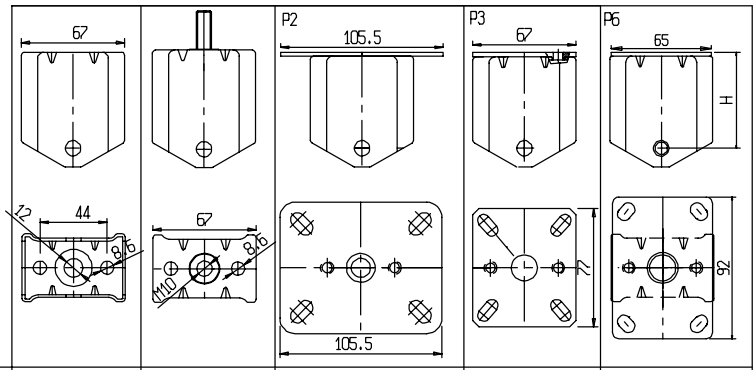

	ITEM	80/30/SFG	80/30/SFFG	80/30/SFP2G	80/30/SFP3G	80/30/SFP6G
80G	H	103	103	103	103	103
	daN D	80	80	80	80	-
	daN S	120	120	120	120	-
	gr	357	393	544	520	524
80Gd	ITEM	80/30/SFGd	80/30/SFFGd	80/30/SFP2Gd	80/30/SFP3Gd	80/30/SFP6Gd
	H	103	103	103	103	103
	daN D	80	80	80	80	-
	daN S	120	120	120	120	-
	gr	408	444	595	571	575
80Gc	ITEM	80/30/SFGc	80/30/SFFGc	80/30/SFP2Gc	80/30/SFP3Gc	80/30/SFP6Gc
	H	103	103	103	103	103
	daN D	80	80	80	80	-
	daN S	120	120	120	120	-
	gr	404	440	591	567	547
80GdA	ITEM	80/30/SFGdA	80/30/SFFGdA	80/30/SFP2GdA	80/30/SFP3GdA	80/30/SFP6GdA
	H	103	103	103	103	103
	daN D	-	-	-	-	-
	daN S	-	-	-	-	-
	gr	-	-	-	-	-
80GcA	ITEM	80/30/SFGcA	80/30/SFFGcA	80/30/SFP2GcA	80/30/SFP3GcA	80/30/SFP6GcA
	H	103	103	103	103	103
	daN D	-	-	-	-	-
	daN S	-	-	-	-	-
	gr	-	-	-	-	-
80N	ITEM	80/30/SFN	80/30/SFFN	80/30/SFP2N	80/30/SFP3N	80/30/SFP6N
	H	103	103	103	103	103
	daN D	-	-	-	-	-
	daN S	-	-	-	-	-
	gr	256	292	443	419	423

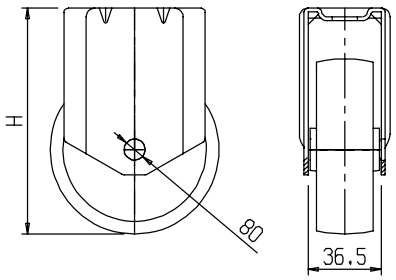

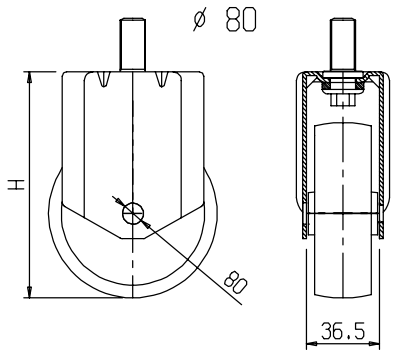

P2-P3-P6

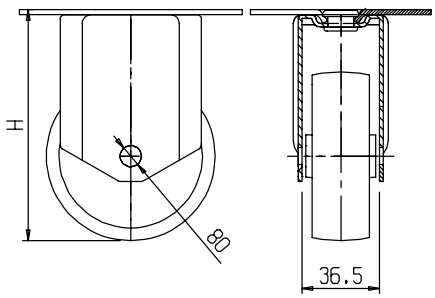

Complessivi fissi serie 100/30 nelle varie tipologie di:Fissaggi,Ruote assemblati
Fixed castors of the 100/30 series with different types of fixings, assembled wheels

Requisiti dei Complessivi assemblati alle varie Ruote
Requirements of the castors assembled with the different wheels

Portata Dinamica conforme UNI EN 12527
Dynamic load capacity conform UNI EN 12527 daN D

Portata Statica conforme UNI EN 12527
Static load capacity conform UNI EN 12527 daN S

gr = Peso per 1 pezzo gr = Weight for a piece

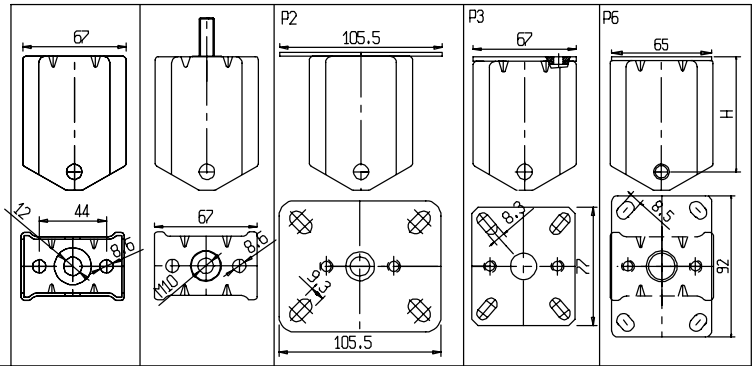

100G	ITEM	100/30/SFG	100/30/SFFG	100/30/SFP2G	100/30/SFP3G	100/30/SFP6G
	H	124	124	124	124	124
	daN D	80	80	80	80	-
	daN S	120	120	120	120	-
	gr	436	472	612	559	563
100Gd	ITEM	100/30/SFGd	100/30/SFFGd	100/30/SFP2Gd	100/30/SFP3Gd	100/30/SFP6Gd
	H	124	124	124	124	124
	daN D	80	80	80	80	-
	daN S	120	120	120	120	-
	gr	507	543	683	630	634
100GCC	ITEM	100/30/SFGCC	100/30/SFFGCC	100/30/SFP2GCC	100/30/SFP3GCC	100/30/SFP6GCC
	H	124	124	124	124	124
	daN D	100	100	100	100	-
	daN S	150	150	150	150	-
	gr	492	528	668	615	619
100GdA	ITEM	100/30/SFGdA	100/30/SFFGdA	100/30/SFP2GdA	100/30/SFP3GdA	100/30/SFP6GdA
	H	124	124	124	124	124
	daN D	-	-	-	-	-
	daN S	-	-	-	-	-
	gr	501	537	677	624	628
100GCCA	ITEM	100/30/SFGCCA	100/30/SFFGCCA	100/30/SFP2GCCA	100/30/SFP3GCCA	100/30/SFP6GCCA
	H	124	124	124	124	124
	daN D	-	-	-	-	-
	daN S	-	-	-	-	-
	gr	456	492	632	579	-
100SR	ITEM	100/30/SFSR	100/30/SFFSR	100/30/SFP2SR	100/30/SFP3SR	100/30/SFP6SR
	H	124	124	124	124	124
	daN D	80	80	80	80	-
	daN S	120	120	120	120	-
	gr	327	363	503	450	454
100N	ITEM	100/30/SFN	100/30/SFFN	100/30/SFP2N	100/30/SFP3N	100/30/SFP6N
	H	124	124	124	124	124
	daN D	60	60	60	60	60
	daN S	90	90	90	90	90
	gr	307	343	483	430	434

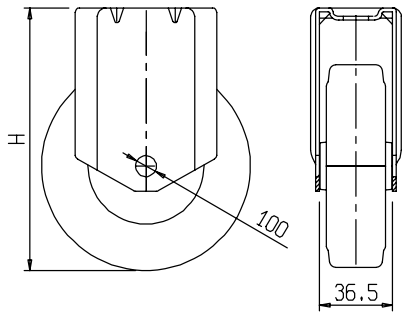

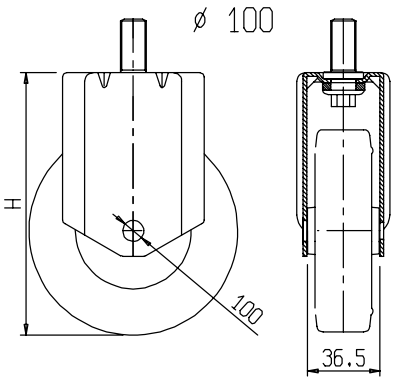

P2-P3-P6

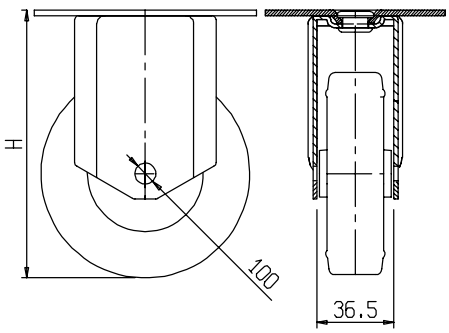

Complessivi fissi serie 125/30 nelle varie tipologie di:Fissaggi,Ruote assemblati
Fixed castors of the 125/30 series with different types of fixings, assembled wheels

Requisiti dei Complessivi assemblati alle varie Ruote
Requirements of the castors assembled with the different wheels

Portata Dinamica conforme UNI EN 12527 Dynamic load capacity conform UNI EN 12527 daN D	Portata Statica conforme UNI EN 12527 Static load capacity conform UNI EN 12527 daN S	gr = Peso per 1 pezzo gr = Weight for a piece

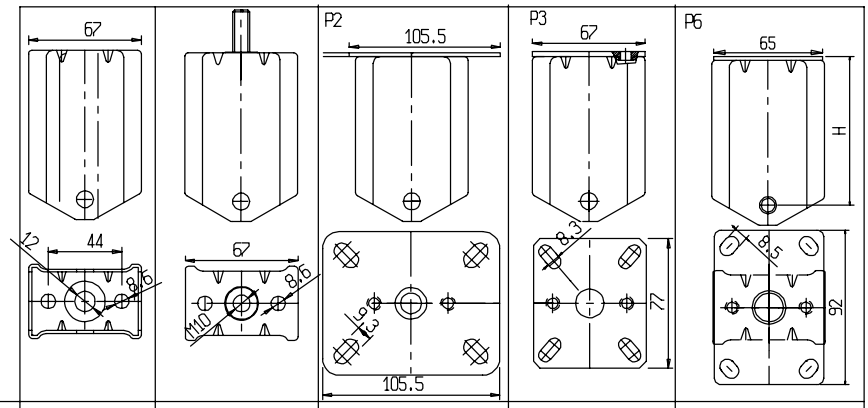

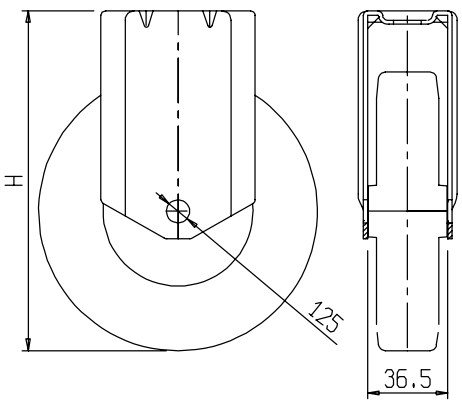

125G	ITEM	125/30/SFG	125/30/SFFG	125/30/SFP2G	125/30/SFP3G	125/30/SFP6G
	H	150	150	150	150	150
	daN D	90	90	90	90	-
	daN S	135	135	135	135	-
	gr	561	597	737	684	688
125Gd	ITEM	125/30/SFGd	125/30/SFFGd	125/30/SFP2Gd	125/30/SFP3Gd	125/30/SFP6Gd
	H	150	150	150	150	150
	daN D	90	90	90	90	-
	daN S	135	135	135	135	-
	gr	602	638	778	725	729
125GCC	ITEM	125/30/SFGCC	125/30/SFFGCC	125/30/SFP2GCC	125/30/SFP3GCC	125/30/SFP6GCC
	H	150	150	150	150	150
	daN D	90	90	90	90	-
	daN S	135	135	135	135	-
	gr	613	649	789	736	740
125GdA	ITEM	125/30/SFGdA	125/30/SFFGdA	125/30/SFP2GdA	125/30/SFP3GdA	125/30/SFP6GdA
	H	150	150	150	150	150
	daN D	-	-	-	-	-
	daN S	-	-	-	-	-
	gr	602	638	778	725	729
125GCCA	ITEM	125/30/SFGCCA	125/30/SFFGCCA	125/30/SFP2GCCA	125/30/SFP3GCCA	125/30/SFP6GCCA
	H	150	150	150	150	150
	daN D	-	-	-	-	-
	daN S	-	-	-	-	-
	gr	548	584	724	671	675
125SR	ITEM	125/30/SFSR	125/30/SFFSR	125/30/SFP2SR	125/30/SFP3SR	125/30/SFP6SR
	H	150	150	150	150	150
	daN D	90	90	90	90	90
	daN S	135	135	135	135	135
	gr	352	388	528	475	479
125SRd	ITEM	125/30/SFSRd	125/30/SFFSRd	125/30/SFP2SRd	125/30/SFP3SRd	125/30/SFP6SRd
	H	150	150	150	150	150
	daN D	90	90	90	90	90
	daN S	135	135	135	135	135
	gr	393	329	569	516	520
125N	ITEM	125/30/SFN	125/30/SFFN	125/30/SFP2N	125/30/SFP3N	125/30/SFP6N
	H	150	150	150	150	150
	daN D	50	50	50	50	50
	daN S	75	75	75	75	75
	gr	329	365	505	452	456

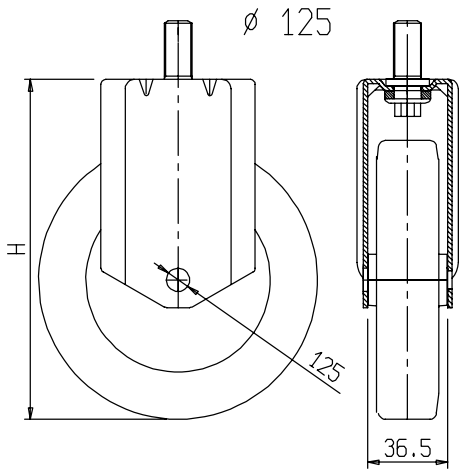

P2-P3-P6

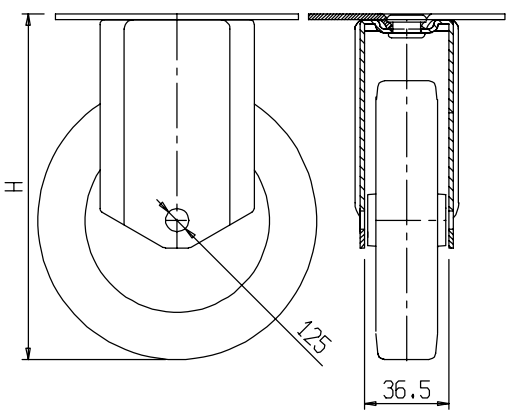

Requisiti Ruote Serie 40 nelle varie tipologie di: diametri, battistrada, organi di rotolamento
Wheels Series 40 requirement in the various types of diameters, tyres, rolling parts

Ruota tipo / Wheel type	G	Gc	GCC	GCCA	PU	PU	N
Catteristiche del Battistrada Tyres characteristics	Gomma Grigia Grey Rubber			Gomma Conduttiva Nera Conductive Black rubber	Poliuretano Colore Arancio Polyuretane Orange Color	Poliuretano Colore Rosso Polyuretane Red Color	Nylon Nero Black Nylon
Durezza del Battistrada conforme UNI EN 12527 Tyres hardness in compliance with UNI EN 12527	shore A -	-	-	-			
	shore D				85	-	73
Temperature di Utilizzo Raccomandate Recommended working temperatures	Max= +70°C	+70°C	+70°C	+40°C	+40°C		+40°C
	Min= -30°C	-30°C	-30°C	-5°C	-5 C		-0°C
Catteristiche del Nucleo Wheel centre characteristics	Nylon Nero Black Nylon			Nylon Nero Conduttivo Conductive Black Nylon	Nylon Bianco White Nylon		
Catteristiche del Mozzo Hub characteristics	Foro Liscio Plain Bearing	Tubo Parafilo Tube Threadguard	Cuscinetto a Sfera Parafilo Ball Bearing Threadguard	Foro Liscio Plain Bearing	Foro Liscio Plain Bearing		Foro Liscio Plain Bearing
Conducibilita'Elettrica conforme UNI EN 12527 Electric conductivity in compliance with UNI EN 12527	hom Ω hom Ω			< 10.000			

Portata Dinamica conforme UNI EN 12527 / Dynamic load capacity conform UNI EN 12527 — daN D

Resistenza al Rotolamento (FR) alla Portata Nominale / Rolling resistance (FR) at rated capacity — daN FR

Portata Statica conforme UNI EN 12527 / Static load capacity conform UNI EN 12527 — daN S

Resistenza al Superamento Ostacolo (FO) alla Portata Nominale H ostacolo=1% ø della Ruota Min 0.5 mm / Obstacle overcoming resistance (FO) at rated capacity obstacle H=1% of wheel, min. 0.5 mm — daN FO

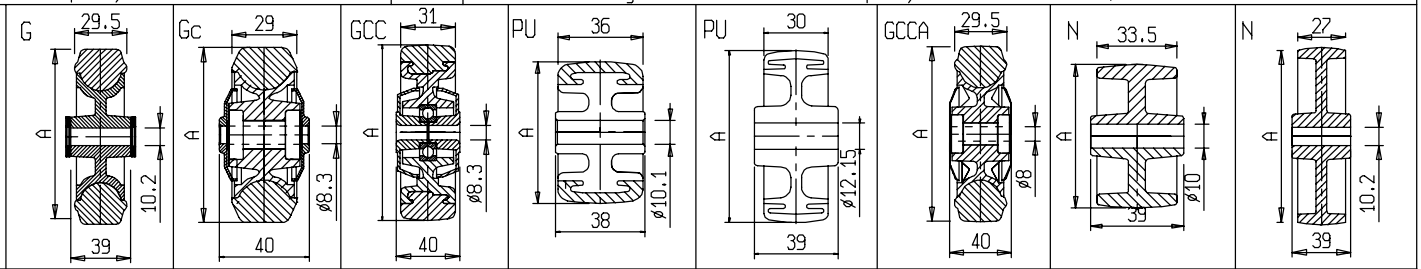

ITEM	-	-		60/40/PU			60/40/N	
A	-	-		60			60	
daN D	-	-		120			-	
daN S	-	-		180			-	
daN FR	-	-		-			-	
daN FO	-	-						
gr								
ITEM	75/40/G	75/40/Gc						75/40/N
A	75	75						75
daN D	70	70						70
daN S	105	105						105
daN FR	-	-						-
daN FO	-	-						
gr	138	195						95
ITEM	80/40/G	80/40/Gc			80/40/PU			80/40/N
A	80	80			80			80
daN D	80	90			-			80
daN S	120	135			-			120
daN FR	-	-			-			-
daN FO	-	-			-			
gr	163	219			-			68
ITEM	100/40/G		100/40/GCC		100/40/PU	100/40/GCCA		100/40/N
A	100		100		100	100		100
daN D	80		80		-	-		80
daN S	120		120		-	-		120
daN FR	-		-		-	-		-
daN FO	-		-		-	-		
gr	232		280		-	-		95
ITEM	125/40/G		125/40/GCC		125/40/PU	125/40/GCCA		125/40/N
A	125		125			125		125
daN D	90		-		-	-		90
daN S	135		-		-	-		135
daN FR	-		-		-	-		-
daN FO	-		-		-	-		
gr	362		390		-	-		158

Assali, cuscinetto e parafili per ruote Serie 40
Axles, bearings and thread guards for wheels of 40 Series

Raccomandazione adozione assali per le varie tipologie di ruote
Recommendation for the adoption of axles in the different types of wheels

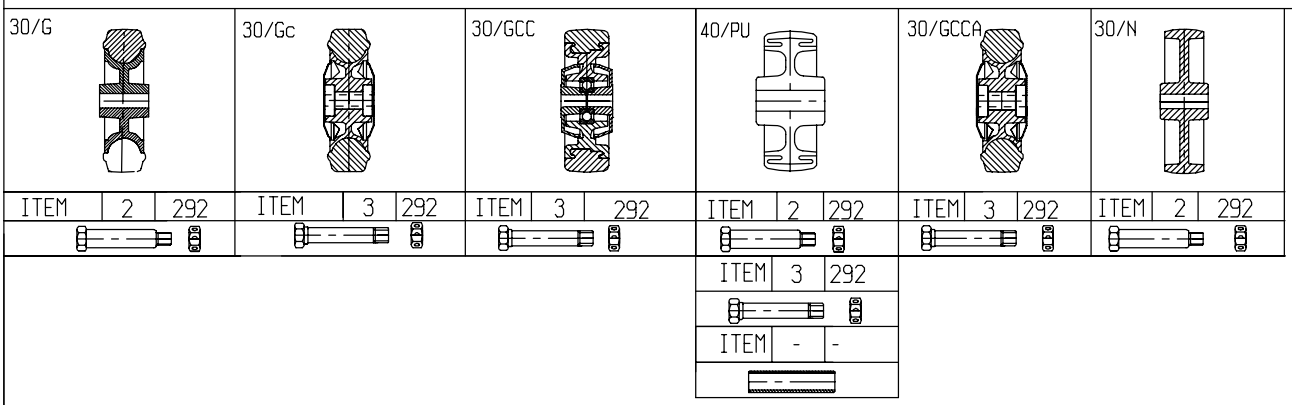

ITEM	2	ASSE VITE 40X10
gr	-	SCREW AXLE 40X10
	-	

ITEM	3	ASSE VITE 40X8 RID
gr	-	SCREW AXLE 40X8 RID
	-	

ITEM	292	M8
gr	5	M8
	-	

ITEM	-	M8	TUBINO
gr	-	M8	TUBE
	-		

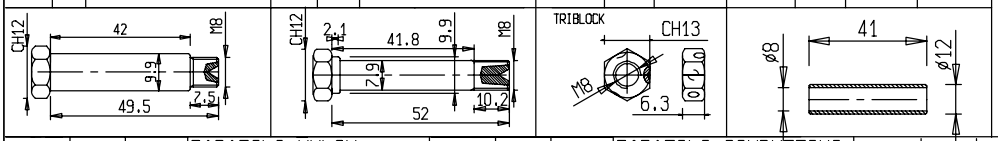

ITEM	gr	
342	-	-
		-

PARAFILI NYLON per RUOTE
75-80/40/GC
NYLON THREADGUARD for WHEELS
75-80/40/GC

ITEM	gr	
-	7	-
		-

PARAFILI CONDUTTIVI per RUOTE
100/30/GCCA 125/GCCA
CONDUCTIVE THREADGUARDS for WHEELS
100/30/GCCA 125/GCCA

ITEM	gr	
426	7	-
		-

PARAFILI NYLON per RUOTE
100/30/GCC 125/30/GCC
NYLON THREADGUARD for WHEELS
100/30/GCC 125/30/GCC

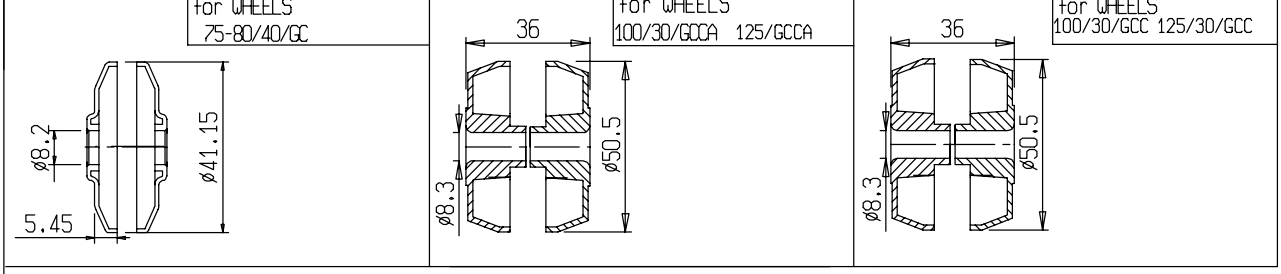

Gamma di Fissaggi Standard per Supporti Serie 40 e 40FT
Range of standard fixings for forks of the 40 and 40FT series

A Foro Passante ø12.2 per Vite di Fissaggio Imbus M12x25 (*) With bolt hole of ø 12.2 for fixing screw IMBUS M12x25 (*)	A Foro Passante ø14.2 per Vite di Fissaggio Imbus M14x25 (*) With bolt hole of ø 14.2 for fixing screw IMBUS M14x25 (*)	Fissaggio a Piastra P9 95X80/40 Plate fixing P9 95X80/40
B12	B14	P9

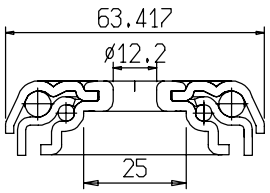

* Lunghezza della Vite Inseribile con Ruota Assemblata
* Length of screw that can be inserted with assembled wheel

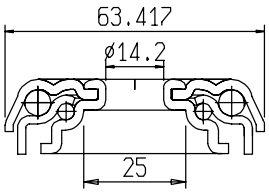

* Lunghezza della Vite Inseribile con Ruota Assemblata
* Length of screw that can be inserted with assembled wheel

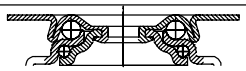

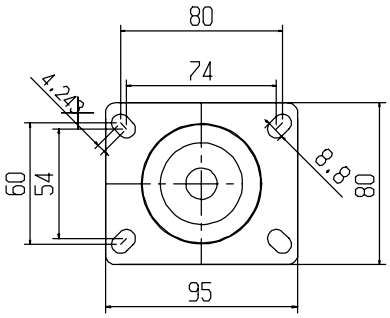

Applicazione Speciale per Serie 40 e 40FT
Special application for 40 Series

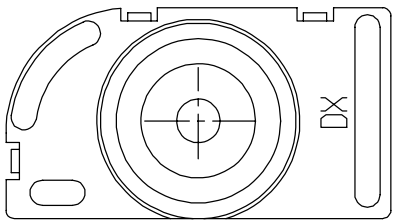

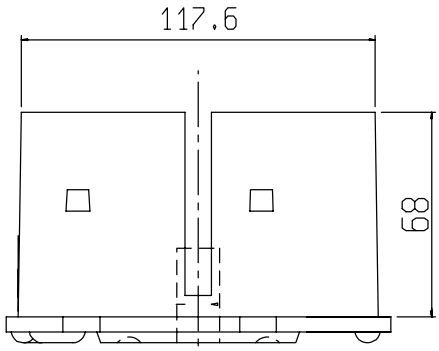

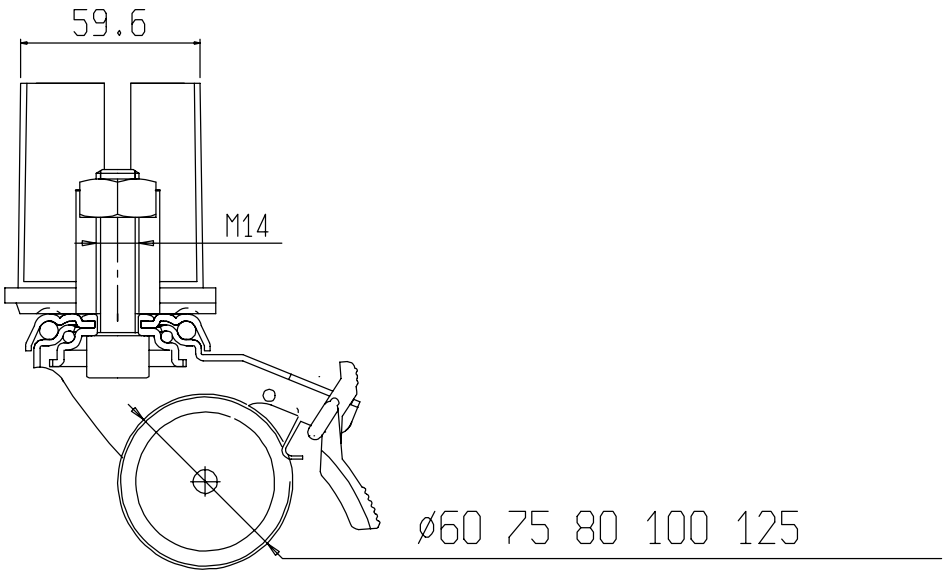

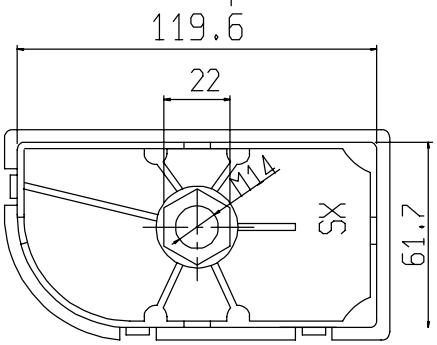

ACCESSORI
ACCESSORIES

PIEDI PER CONTENITORI-FEET FOR CONTAINERS

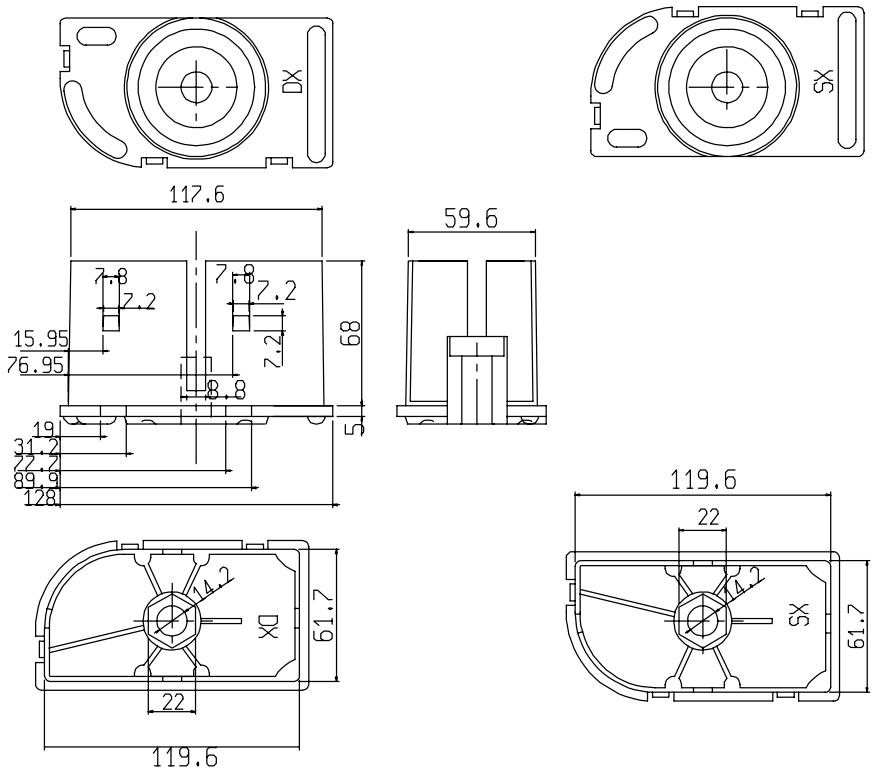

PARACOLPI-BUFFER

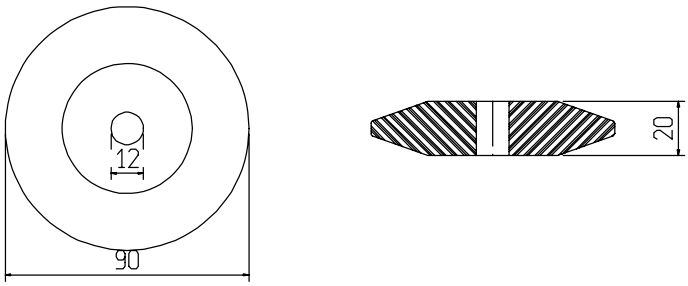

ITEM	D	PESO gr. WEIGHT
-	-	-
-	-	-
-	-	-
-	-	-
-	-	-

Supporti girevoli Serie 40 per i vari Diametri di Ruote e Gamma di Fissaggi
Swivel forks of the 40 series for the various wheels diameters and fixings range

Materiale: Lamiera ferro secondo standard EN 10130
Trattamanto superficiale: Zincatura passivata UNI ISO 2081
Corona sfere superiore: n. 23 sfere 1/4" ingrassate
Corona sfere inferiore: n. 26 sfere 5/32" ingrassate
Material: Iron sheet subject to EN 10130
Surface treatment: passivated galvanisation subject to UNI ISO 2081
Upper ball crown N. 23 greased balls 1/4
Lower ball crown N. 26 greased balls 5/32

daN S Portata Statica conforme UNI EN 12527

daN S Static load capacity conform UNI EN 12527

gr = Peso per 1 pezzo

gr = Weight for a piece

	B12	B14	P9 95X80
	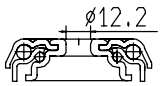	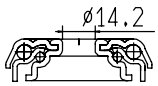	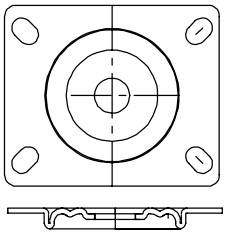
ITEM	60/40/B12	60/40/B14	60/40/P9
H	59	59	59
B	30	30	30
daN S	-	-	-
gr	-	-	326
ITEM	75-80/40/B12	75-80/40/B14	75-80/40/P9
H	70.1	70.1	70.1
B	33.5	33.5	33.5
daN S	-	-	-
gr	254	254	325
ITEM	100/40/B12	100/40/B14	100/40/P9
H	78	78	78
B	25	25	25
daN S			
gr	270	270	341
ITEM	125/40/B12	125/40/B14	125/40/P9
H	91.4	91.4	91.4
B	29	29	29
daN S	-	-	-
gr	289	289	360

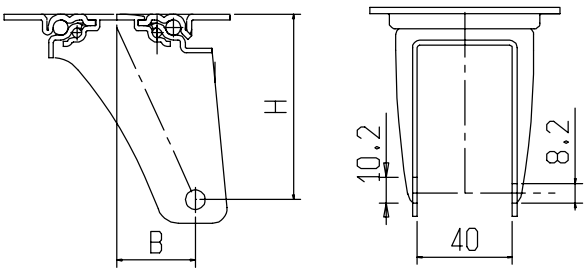

* La portata statica indicata per i soli supporti corrisponde a 1.5 portata dinamica verificata secondo UNI 12527 montando una ruota in Nylon

* The static load capacity mentioned for the only forks correspond to 1.5 of dynamic load capacity checked accoding to UNI 12527 assembling with a nylon wheel

Supporti girevoli con freno serie 40FT per i vari Diametri di Ruote e Gamma di Fissaggi

Swivel forks with brake of the 40FT series for the various wheels diameters and fixings rage

Materiale: Lamiera ferro secondo standard EN 10130
Trattamanto superficiale: Zincatura passivata UNI ISO 2081
Corona sfere superiore: n. 23 sfere 1/4" ingrassate
Corona sfere inferiore: n. 26 sfere 5/32" ingrassate
Material: Iron sheet subject to EN 10130
Surface treatment: passivated galvanisation subject to UNI ISO 2081
Upper ball crown N. 23 greased balls 1/4
Lower ball crown N. 26 greased balls 5/32

daN S Portata Statica conforme UNI EN 12527
daN S Static load capacity conform UNI EN 12527

gr = Peso per 1 pezzo
gr = Weight for a piece

B12 — ø12.2

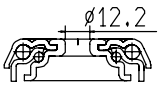

B14 — ø14.2

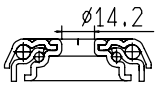

P9 95X80

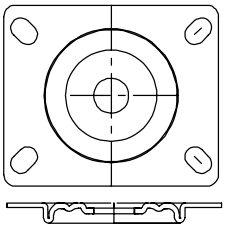

	B12	B14	P9 95X80
ITEM	60/40FT/B12	60/40FT/B14	60/40FT/P9
H	59	59	59
F	16.5	16.5	16.5
B	30	30	30
daN S	-	-	-
gr	-	-	390
ITEM	75/40FT/B12	75/40FT/B14	75/40FT/P9
H	70.1	70.1	70.1
F	15.6	15.6	15.6
B	32.4	32.4	32.4
daN S	75	75	75
gr	-	-	-
ITEM	80/40FT/B12	80/40FT/B14	80/40FT/P9
H	70.1	70.1	70.1
F	15.6	15.6	15.6
B	32.4	32.4	32.4
daN S	75	75	75
gr	330	330	401
ITEM	100/40FT/B12	100/40FT/B14	100/40FT/P9
H	78	78	78
F	16.3	16.3	16.3
B	26	26	26
daN S	75	75	75
gr	349	349	420
ITEM	125/40FT/B12	125/40FT/B14	125/40FT/P9
H	91.4	91.4	91.4
F	19	19	19
B	30.6	30.6	30.6
daN S	75	75	75
gr	395	395	466

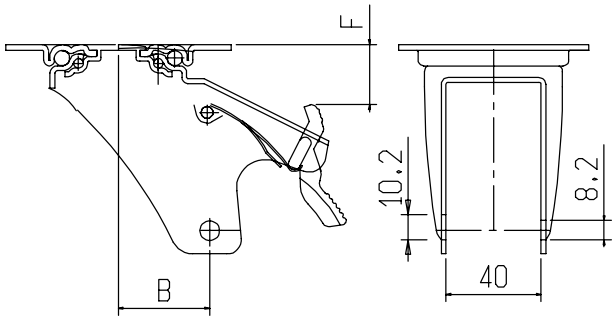

* La portata statica indicata per i soli supporti corrisponde a 1.5 portata dinamica verificata secondo UNI 12527 montando una ruota in Nylon

* The static load capacity mentioned for the only forks correspond to 1.5 of dynamic load capacity checked accoding to UNI 12527 assembling with a nylon wheel

Complessivi Girevoli Serie 60/40 nelle diverse tipologie di fissaggi, ruote assemblate.
Swivel castors 60/40 Series in the different types of fixings, assembled wheels

Requisiti dei Complessivi assemblati alle varie Ruote Requirements of the castors assembled with the different wheels		PU	N
Portata Dinamica conforme UNI EN 12527 Dynamic load capacity conform UNI EN 12527	daN D	120	100
Portata Statica conforme UNI EN 12527 Static load capacity conform UNI EN 12527	daN S	180	150

		B12	B14	P9 95X80
gr = Peso per 1 pezzo gr =Weight for a piece		ø12.2	ø14.2	
60/PU	ITEM	60/40/PUB12	60/40/PUB14	60/40/PUP9
	gr	-	-	-
60/N	ITEM	60/40/NB12	60/40/NB14	60/40/NP9
	gr	-	-	-

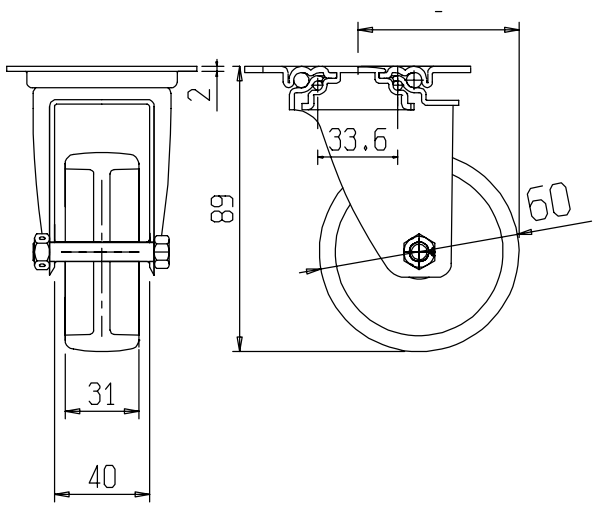

Complessivi Girevoli Serie 75/40 nelle diverse tipologie di fissaggi, ruote assemblate
Swivel castors 75/40 Series in the different types of fixings, assembled wheels

Requisiti dei Complessivi assemblati alle varie Ruote Requirements of the castors assembled with the different wheels		G	Gc	N
Portata Dinamica conforme UNI EN 12527 Dynamic load capacity conform UNI EN 12527	daN D	80	80	50
Portata Statica conforme UNI EN 12527 Static load capacity conform UNI EN 12527	daN S	120	120	75

gr = Peso per 1 pezzo

gr = Weight for a piece

		B12	B14	P9 95X80
		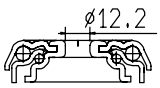 ø12.2	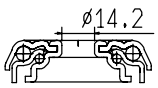 ø14.2	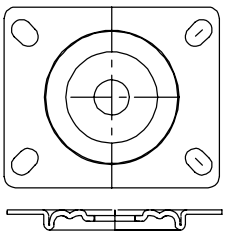
75G 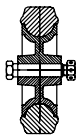	ITEM	75/40/GB12	75/40/GB14	75/40/GP9
ITEM 6 X 2 ITEM 6 RONDELLA 20X10X2.5 gr - WASHER 20X10X2.5	gr	-	-	-
75Gc 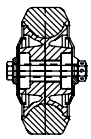	ITEM	75/40/GcB12	75/40/GcB14	75/40/GcP9
	gr	-	-	-
75N 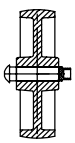	ITEM	75/40/NB12	75/40/NB14	75/40/NP9
	gr	-	-	-

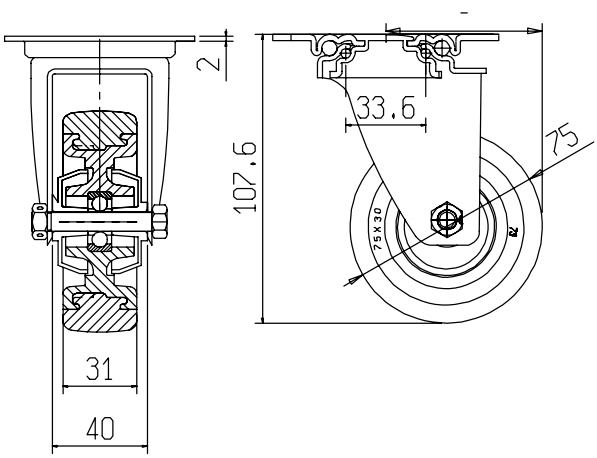

Complessivi Girevoli Serie 80/40 nelle varie tipologie di fissaggi, ruote assemblate
Swivel castors 80/40 Series in the different tupes of fixings, assembled wheels

Requisiti dei Complessivi assemblati alle varie Ruote Requirements of the castors assembled with the different wheels		G	Gc	PU	N
Portata Dinamica conforme UNI EN 12527 Dynamic load capacity conform UNI EN 12527	daN D	85	90	150	50
Portata Statica conforme UNI EN 12527 Static load capacity conform UNI EN 12527	daN S	127.5	135	225	75

gr = Peso per 1 pezzo

gr = Weight for a piece

		B12	B14	P9 95X80
		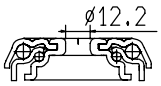 ø12.2	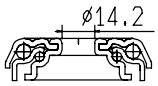 ø14.2	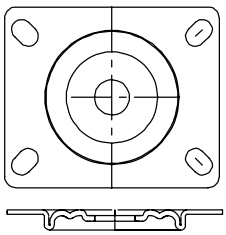
80G 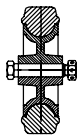	ITEM	80/40/GB12	80/40/GB14	80/40/GP9
ITEM 6 X 2 ITEM 6 RONDELLA 20X10X2.5 gr - WASHER 20X10X2.5	gr	-	-	-
80Gc 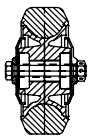	ITEM	80/40/GcB12	80/40/GcB14	80/40/GcP9
	gr	483	483	554
80PU 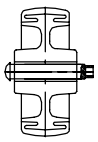	ITEM	80/40/PUB12	80/40/PUB14	80/40/PUP9
	gr	-	-	-
80N 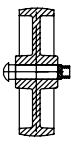	ITEM	80/40/NB12	80/40/NB14	80/40/NP9
	gr	-	-	-

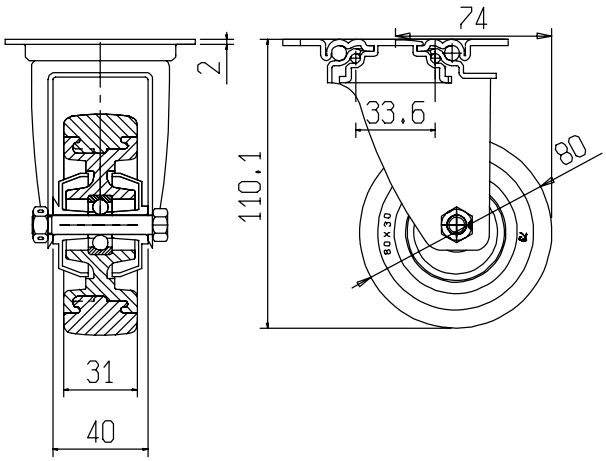

Complessivi girevoli Serie 100/40 nelle varie tipologie di fissaggi, ruote assemblate
Swivel castors 100/40 Series in the different types of fixings, assembled wheels

Requisiti dei Complessivi assemblati alle varie Ruote Requirements of the castors assembled with the different wheels		G	GCC	GCCA	PU	N
Portata Dinamica conforme UNI EN 12527 Dynamic load capacity conform UNI EN 12527	daN D	100	100	-	-	50
Portata Statica conforme UNI EN 12527 Static load capacity conform UNI EN 12527	daN S	150	150	-	-	75
Conducibilita'Elettrica conforme UNI EN 12527 Electric conductivity in compliance with UNI EN 12527	Ω hom			< 10.000		

gr = Peso per 1 pezzo

gr = Weight for a piece

		B12	B14	P9 95X80
		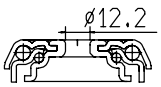	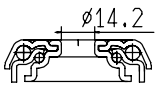	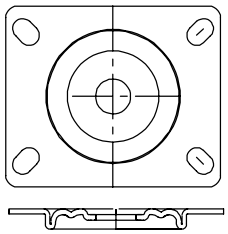
100G 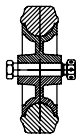	ITEM	100/40/GB12	100/40/GB14	100/40/GP9
	gr	-	-	-

ITEM	6	X 2
ITEM 6	RONDELLA 20X10X2.5	
gr -	WASHER 20X10X2.5	

100GCC 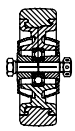	ITEM	100/40/GCCB12	100/40/GCCB14	100/40/GCCP9
	gr	576	576	647
100GCCA 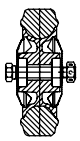	ITEM	100/40/GCCAB12	100/40/GCCAB14	100/40/GCCAP9
	gr	-	-	-
100PU 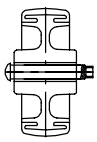	ITEM	100/40/PUB12	100/40/PUB14	100/40/PUP9
	gr	-	-	-
100N 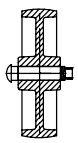	ITEM	100/40/NB12	100/40/NB14	100/40/NP9
	gr	-	-	-

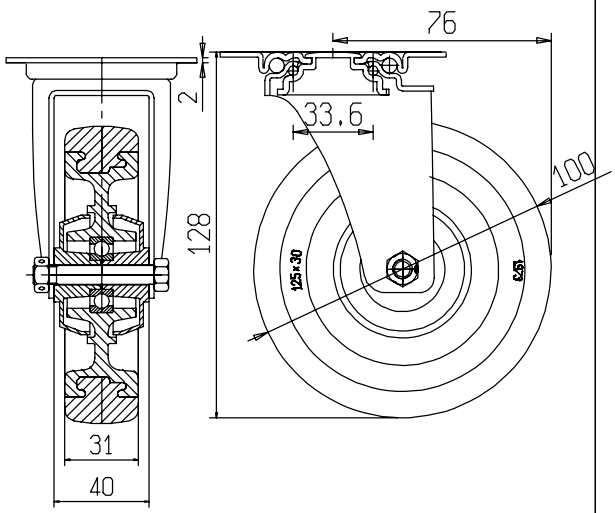

Complessivi girevoli Serie 125/40 nelle varie tipologie di fissaggi, ruote assemblate
Swivel castors 125/40 Series with different types of fixings, assembled wheels

Requisiti dei Complessivi assemblati alle varie Ruote Requirements of the castors assembled with the different wheels		G	GCC	GCCA	PU	N
Portata Dinamica conforme UNI EN 12527 Dynamic load capacity conform UNI EN 12527	daN D	100	100	-	-	50
Portata Statica conforme UNI EN 12527 Static load capacity conform UNI EN 12527	daN S	150	150	-	-	75
Conducibilita'Elettrica conforme UNI EN 12527 Electric conductivity in compliance with UNI EN 12527	Ω hom			< 10.000		

gr = Peso per 1 pezzo

gr = Weight for a piece

		B12	B14	P9 95X80
		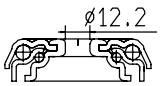 ø12.2	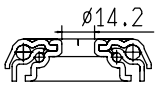 ø14.2	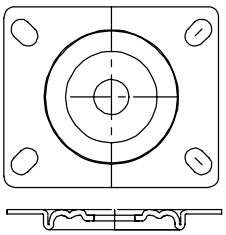
125G 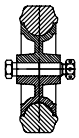	ITEM	125/40/GB12	125/40/GB14	125/40/GP9
ITEM 6 X 2 ITEM 6 RONDELLA 20X10X2.5 WASHER 20X10X2.5	gr	-	-	-
125GCC 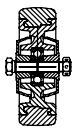	ITEM	125/40/GCCB12	125/40/GCCB14	125/40/GCCP9
	gr	576	576	647
125GCCA 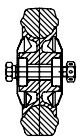	ITEM	125/40/GCCAB12	125/40/GCCAB14	125/40/GCCAP9
	gr	-	-	-
125PU 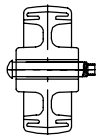	ITEM	125/40/PUB12	125/40/PUB14	125/40/PUP9
	gr	-	-	-
125N 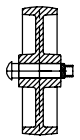	ITEM	125/40/NB12	125/40/NB14	125/40/NP9
	gr	-	-	-

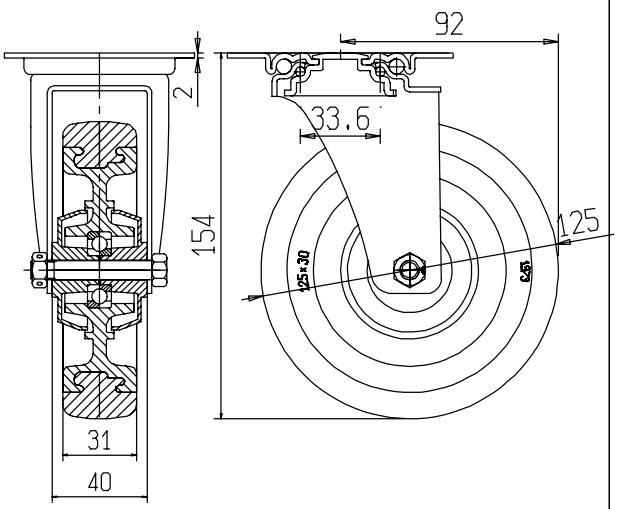

Complessivi girevoli con freno Serie 60/40FT nelle varie tipologie di fissaggi, ruote assemblate

Swivel castors with brake 60/40FT in the different types of fixings, assembled wheels

Requisiti dei Complessivi assemblati alle varie Ruote Requirements of the castors assembled with the different wheels		PU	N
Portata Dinamica conforme UNI EN 12527 Dynamic load capacity conform UNI EN 12527	daN D	120	100
Portata Statica conforme UNI EN 12527 Static load capacity conform UNI EN 12527	daN S	180	150
Resistenza Passiva del Dispositivo Frenante Conforme UNI EN 12527 Passive resistance of braking device in compliance with UNI EN 12527	daN FT		

gr = Peso per 1 pezzo

gr = Weight for a piece

		B12	B14	P9 95X80
		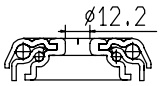 ø12.2	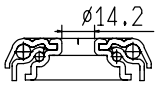 ø14.2	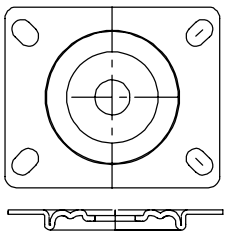
60/PU 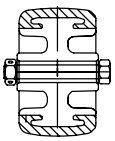	ITEM	60/40FT/PUB12	60/40FT/PUB14	60/40FT/PUP9
	gr	-	-	-
60/N 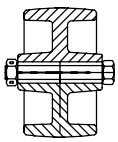	ITEM	60/40FT/NB12	60/40FT/NB14	60/40FT/NP9
	gr	-	-	-

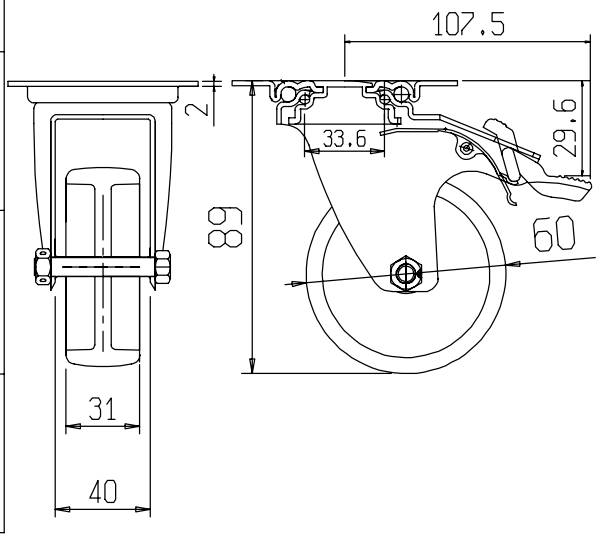

Complessivi girevoli con freno Serie 75/40FT nelle varie tipologie di fissaggi, ruote assemblate

Swivel castors with brake 75/40FT in the different types of fixings, assembled wheels

Requisiti dei Complessivi assemblati alle varie Ruote Requirements of the castors assembled with the different wheels		G	Gc	N
Portata Dinamica conforme UNI EN 12527 Dynamic load capacity conform UNI EN 12527	daN D	80	80	50
Portata Statica conforme UNI EN 12527 Static load capacity conform UNI EN 12527	daN S	120	120	75
Resistenza Passiva del Dispositivo Frenante Conforme UNI EN 12527 Passive resistance of braking device in compliance with UNI EN 12527	daN FT	-		

gr = Peso per 1 pezzo

gr = Weight for a piece

		B12	B14	P9 95X80
		ø12.2	ø14.2	
75G	ITEM	75/40FT/GB12	75/40FT/GB14	75/40FT/GP9
	gr	-	-	-
75Gc	ITEM	75/40FT/GcB12	75/40FT/GcB14	75/40FT/GcP9
	gr	-	-	-
75N	ITEM	75/40FT/NB12	75/40FT/NB14	75/40FT/NP9
	gr	-	-	-

ITEM	6	X 2

ITEM		
6	-	RONDELLA 20X10X2.5
gr	-	WASHER 20X10X2.5

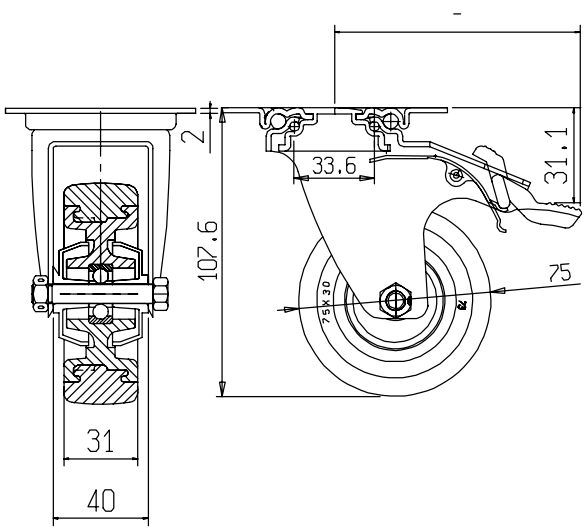

Complessivi girevoli con freno Serie 80/40FT nelle varie tipologie di fissaggi, ruote assemblate

Swivel castors with brake 80/40FT Series in the different types of fixings, assembled wheels

Requisiti dei Complessivi assemblati alle varie Ruote Requirements of the castors assembled with the different wheels		G	Gc	PU	N
Portata Dinamica conforme UNI EN 12527 Dynamic load capacity conform UNI EN 12527	daN D	85	85	-	50
Portata Statica conforme UNI EN 12527 Static load capacity conform UNI EN 12527	daN S	127.5	127.5	-	75
Resistenza Passiva del Dispositivo Frenante Conforme UNI EN 12527 Passive resistance of braking device in compliance with UNI EN 12527	daN FT	-			

gr = Peso per 1 pezzo

gr = Weight for a piece

		B12	B14	P9 95X80
		ø12.2	ø14.2	
80G	ITEM	80/40FT/GB12	80/40FT/GB14	80/40FT/GP9
ITEM 6 X 2 ITEM 6 RONDELLA 20X10X2.5 WASHER 20X10X2.5	gr	-	-	-
80Gc	ITEM	80/40FT/GcB12	80/40FT/GcB14	80/40FT/GcP9
	gr	483	483	554
80PU	ITEM	80/40FT/PUB12	80/40FT/PUB14	80/40FT/PUP9
	gr	-	-	-
80N	ITEM	80/40FT/NB12	80/40FT/NB14	80/40FT/NP9
	gr	-	-	-

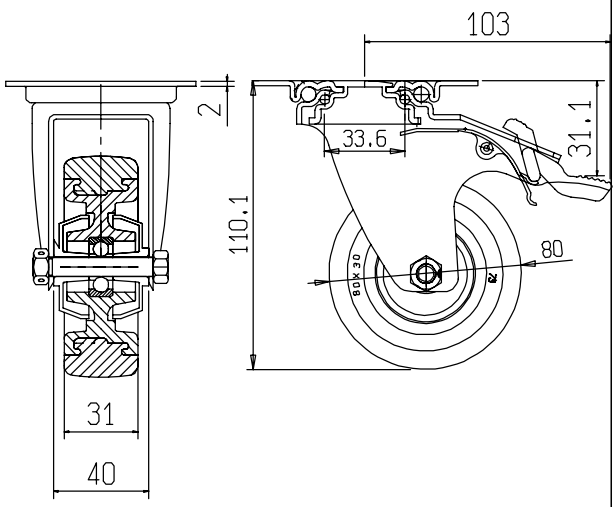

Complessivi girevoli con freno Serie 100/40FT nelle varie tipologie di fissaggi, ruote assemblate

Swivel castors with brake 100/40FT in the different tupes of fixings, assembled wheels

Requisiti dei Complessivi assemblati alle varie Ruote Requirements of the castors assembled with the different wheels		G	GCC	GCCA	PU	N
Portata Dinamica conforme UNI EN 12527 Dynamic load capacity conform UNI EN 12527	daN D	100	100	-	-	50
Portata Statica conforme UNI EN 12527 Static load capacity conform UNI EN 12527	daN S	150	150	-	-	75
Resistenza Passiva del Dispositivo Frenante Conforme UNI EN 12527 Passive resistance of braking device in compliance with UNI EN 12527	daN FT	-				
Conducibilita'Elettrica conforme UNI EN 12527 Electric conductivity in compliance with UNI EN 12527	Ω hom			< 10.000		

gr = Peso per 1 pezzo

gr =Weight for a piece

		B12	B14	P9 95X80
		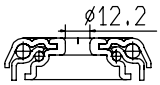 ø12.2	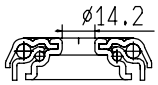 ø14.2	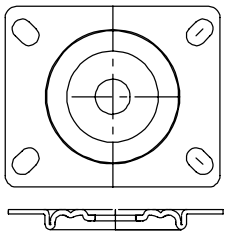
100G 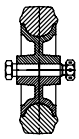	ITEM	100/40FT/GB12	100/40FT/GB14	100/40FT/GP9
ITEM 6 X 2 ITEM 6 RONDELLA 20X10X2.5 / WASHER 20X10X2.5	gr	-	-	-
100GCC 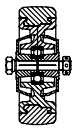	ITEM	100/40FT/GCCB12	100/40FT/GCCB14	100/40FT/GCCP9
	gr	655	655	726
100GCCA 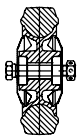	ITEM	100/40FT/GCCAB12	100/40FT/GCCAB14	100/40FT/GCCAP9
	gr	-	-	-
100PU 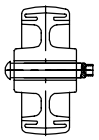	ITEM	100/40FT/PUB12	100/40FT/PUB14	100/40FT/PUP9
	gr	-	-	-
100N 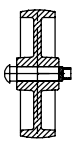	ITEM	100/40FT/NB12	100/40FT/NB14	100/40FT/NP9
	gr	-	-	-

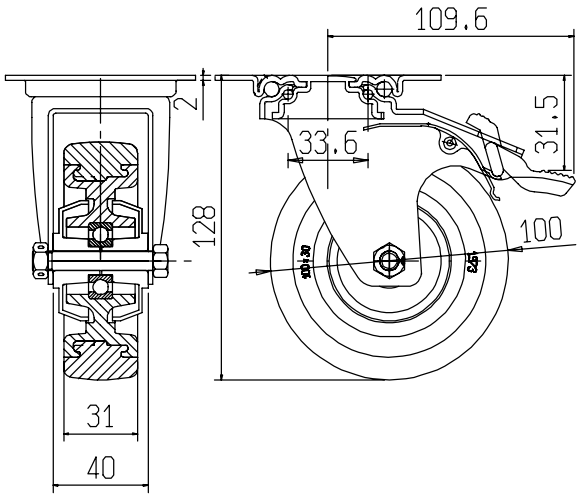

Complessivi girevoli con freno Serie 125/40FT nelle varie tipologie di fissaggi, ruote assemblate

Swivel castors with brake 125/40FT in the different types of fixings, assembled wheels

Requisiti dei Complessivi assemblati alle varie Ruote Requirements of the castors assembled with the different wheels		G	GCC	GCCA	PU	N
Portata Dinamica conforme UNI EN 12527 Dynamic load capacity conform UNI EN 12527	daN D	100	100	-	-	50
Portata Statica conforme UNI EN 12527 Static load capacity conform UNI EN 12527	daN S	150	150	-	-	75
Resistenza Passiva del Dispositivo Frenante Conforme UNI EN 12527 Passive resistance of braking device in compliance with UNI EN 12527	daN FT	-				
Conducibilita'Elettrica conforme UNI EN 12527 Electric conductivity in compliance with UNI EN 12527	Ω hom			< 10.000		

gr = Peso per 1 pezzo

gr = Weight for a piece

		B12	B14	P9 95X80
125G	ITEM	125/40FT/GB12	125/40FT/GB14	125/40FT/GP9
	gr	-	-	-
125GCC	ITEM	125/40FT/GCCB12	125/40FT/GCCB14	125/40FT/GCCP9
	gr	802	802	873
125GCCA	ITEM	125/40FT/GCCAB12	125/40FT/GCCAB14	125/40FT/GCCAP9
	gr	-	-	-
125PU	ITEM	125/40FT/PUB12	125/40FT/PUB14	125/40FT/PUP9
	gr			
125N	ITEM	125/40FT/NB12	125/40FT/NB14	125/40FT/NP9
	gr	-	-	-

ø12.2

ø14.2

ITEM	6	X 2

ITEM	6	RONDELLA 20X10X2.5
gr	-	WASHER 20X10X2.5

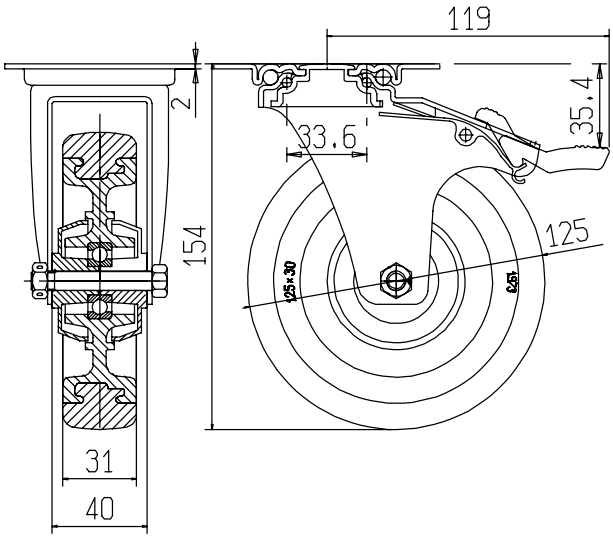

Supporti fissi Serie 40 per i vari Diametri di Ruote e Gamma di Fissaggi
Fixed forks of the 40 series for the various wheel diameters and fixings rage

Materiale: Lamiera ferro secondo standard EN 10130
Trattamanto superficiale Zincatura passivata UNI ISO 2081

Material: Iron sheet subject to EN 10130
Surface treatment;passivated galvanisation subject to UNI ISO 2081

daN S Portata statica conforme UNI EN 12527 *
daN S Static load capacity conform UNI EN 12527 *

gr = Peso per 1 pezzo
gr = Weight for a piece

ITEM	75-80/40/SF	100/40/SF	125/40/SF
H	70	77	91.5
daN S	-	-	-
gr	-	-	-

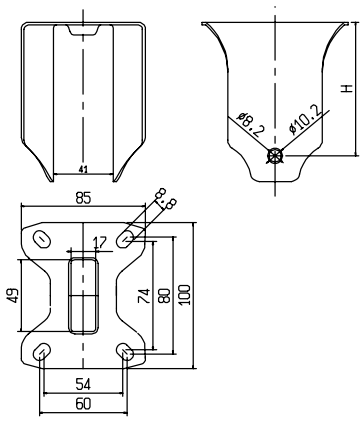

* La portata statica indicata per i soli supporti corrisponde a 1.5 portata dinamica, verificata secondo UNI 12527 montando una ruota in Nylon

* The static load capacity mentioned for the only forks correspond to 1.5 of dynamic load capacity checked according to UNI 12527 assembling with a nylon wheel

Complessivi fissi serie 75/40 nelle varie tipologie di:Fissaggi,Ruote assemblati
Fixed castors of the 75/40 series whit different types of fixing, assembled wheels

Requisiti dei Complessivi assemblati alle varie Ruote
Requirements of the castors assembled with the different wheels

Portata Dinamica conforme UNI EN 12527 Dynamic load capacity conform UNI EN 12527 daN D	Portata Statica conforme UNI EN 12527 Static load capacity conform UNI EN 12527 daN S	gr = Peso per 1 pezzo gr = Weight for a piece

75G 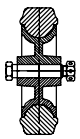	ITEM	75/40/SFG
	H	
	daN D	
	daN S	
	gr	
75Gc 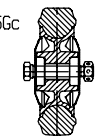	ITEM	75/40/SFGc
	H	
	daN D	
	daN S	
	gr	
75N 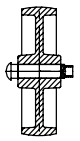	ITEM	75/40/SFN
	H	
	daN D	
	daN S	
	gr	

Complessivi fissi serie 80/40 nelle varie tipologie di:Fissaggi,Ruote assemblati
Fixed castors of the 80/40 series whit different types of fixing, assembled wheels

Requisiti dei Complessivi assemblati alle varie Ruote
Requirements of the castors assembled with the different wheels

Portata Dinamica conforme UNI EN 12527 Dynamic load capacity conform UNI EN 12527 daN D	Portata Statica conforme UNI EN 12527 Static load capacity conform UNI EN 12527 daN S	gr = Peso per 1 pezzo gr = Weight for a piece

80G 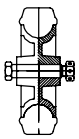	ITEM	80/40/SFG
	H	
	daN D	
	daN S	
	gr	
80Gc 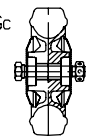	ITEM	80/40/SFGc
	H	
	daN D	
	daN S	
	gr	
80PU 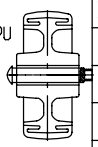	ITEM	80/40/SFPU
	H	
	daN D	
	daN S	
	gr	
80N 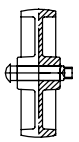	ITEM	80/40/SFN
	H	
	daN D	
	daN S	
	gr	

Complessivi fissi serie 100/40 nelle varie tipologie di:Fissaggi,Ruote assemblati
Fixed castors of the 100/40 series whit different types of fixing, assembled wheels

Requisiti dei Complessivi assemblati alle varie Ruote
Requirements of the castors assembled with the different wheels

Portata Dinamica conforme UNI EN 12527 Dynamic load capacity conform UNI EN 12527 daN D	Portata Statica conforme UNI EN 12527 Static load capacity conform UNI EN 12527 daN S	gr = Peso per 1 pezzo gr = Weight for a piece

100G 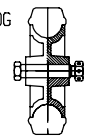	ITEM	100/40/SFG
	H	
	daN D	
	daN S	
	gr	
100GCC 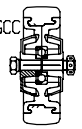	ITEM	100/40/SFGCC
	H	
	daN D	
	daN S	
	gr	
100GcA 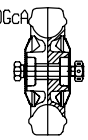	ITEM	100/40/SFGCCA
	H	
	daN D	
	daN S	
	gr	
100PU 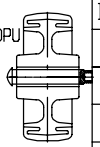	ITEM	100/40/SFPU
	H	
	daN D	
	daN S	
	gr	
100N 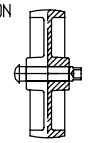	ITEM	100/40/SFN
	H	
	daN D	
	daN S	
	gr	

Complessivi fissi serie 125/40 nelle varie tipologie di:Fissaggi,Ruote assemblati
Fixed castors of the 125/40 series whit different types of fixing, assembled wheels

Requisiti dei Complessivi assemblati alle varie Ruote
Requirements of the castors assembled with the different wheels

Portata Dinamica conforme UNI EN 12527 Dynamic load capacity conform UNI EN 12527 daN D	Portata Statica conforme UNI EN 12527 Static load capacity conform UNI EN 12527 daN S	gr = Peso per 1 pezzo gr = Weight for a piece

125G 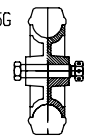	ITEM	125/40/SFG
	H	154
	daN D	
	daN S	
	gr	
125GCC 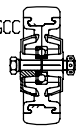	ITEM	125/40/SFGCC
	H	154
	daN D	
	daN S	
	gr	
125GcA 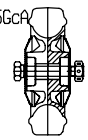	ITEM	125/40/SFGCCA
	H	154
	daN D	
	daN S	
	gr	
125PU 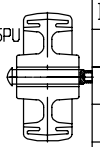	ITEM	125/40/SFPU
	H	154
	daN D	
	daN S	
	gr	
125N 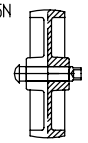	ITEM	125/40/SFN
	H	154
	daN D	
	daN S	
	gr	

Ruote Adottate per Serie 36/2-50/2-50/2FT nelle varie tipologie di Diametri,Battistrada
Wheels used for 36/2-50/2-50/2FT series in the various types of diameters and tyres

Ruota tipo / Wheel type	N		G	Gd	GCC	GdA	GcA	PU	SR	SRd	NSF
Catteristiche del Battistrada / Tyre characteristics	Nylon Nero / Black Nylon		Gomma Grigia / Grey Rubber			Gomma Conduttiva Nera / Conductive Black rubber		Poliuretano Colore Arancio / Polyuretane Orange Color	Gomma Sintetica Grigia / Synthetic Grey rubber		Nylon Bianco / White Nylon
Durezza del Battistrada conforme UNI EN 12527 / Tyre hardness in compliance with UNI EN 12527	shore A	>100	76	76	76	85	85	85	78	78	>100
Temperature di Utilizzo Raccomandate / Recommended working temperatures	Max=	+40°C	+70°C	+70°C	+70°C	+40°C	+40°C	+40°C	+60°C	+60°C	+40°C
	Min=	0°C	-30°C	-30°C	-30°C	-5°C	-5°C	-5 C	-10°C	-10°C	0°C
Catteristiche del Nucleo / Wheel centre characteristics			Nylon Nero / Black Nylon			Nylon Nero Conduttivo / Conductive Black Nylon		Nylon Bianco / White Nylon	Polipropilene Grigio / Grey Polypropylene		
Catteristiche del Mozzo / Hub characteristics	Foro Liscio Plain Bearing		Foro Liscio Plain Bearing	Tubo Parafilo Tube Threadguard	Cuscinetto a Sfera Parafilo Ball Bearing Threadguard	Foro Liscio Plain Bearing	Cuscinetto a Sfera Parafilo Ball Bearing Threadguard	Foro Liscio Plain Bearing	Foro Liscio Plain Bearing	Tubo Parafilo Tube Threadguard	Foro Liscio Plain Bearing
Conducibilita'Elettrica conforme UNI EN 12527 / Electric conductivity in compliance with UNI EN 12527	hom / hom					-	-	daN = Peso per 1 pezzo / daN = Weight for a piece			
Portata Dinamica conforme UNI EN 12527 / Dynamic load capacity conform UNI EN 12527	daN D		Resistenza al Rotolamento (FR) alla Portata Nominale / Rolling resistance (FR) at rated capacity daN FR								
Portata Statica conforme UNI EN 12527 / Static load capacity conform UNI EN 12527	daN S		Resistenza al Superamento Ostacolo (FO) alla Portata Nominale H ostacolo=1% ø della Ruota Min 0.5 mm / Obstacle overcoming resistance (FO) at rated capacity obstacle H=1% of wheel, min. 0.5 mm daN FO								

	36LNx2	36SRx2	36PUx2
	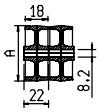	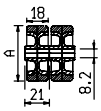	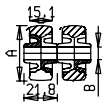
ITEM	36LN	36LSR	36LPU
A	36	36	36
daN D	-	-	-
daN S	-	-	-
daN FR	-	-	-
daN FO	-	-	-
daN	12X2	14X2	14.5X2

	LNx2	LGx2	LGdx2	LGCCx2	LGdAx2	LGcAx2	LSRx2	LPUx2	PUx1	NSFx1
	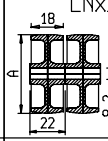	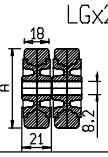	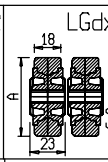	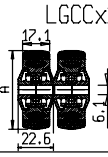	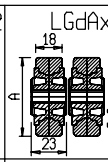	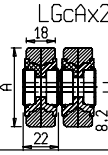	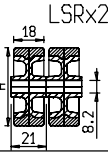	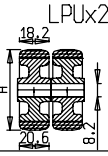	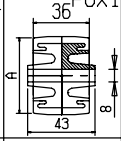	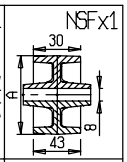
ITEM	50LN	50LG	50LGd	50LGCC	50LGdA	50LGcA	50LSR	50LPU	50230PU36	50230NSF
A	50	50	50	50	50	50	50	50	50	50
daN D	-	-	-	-	-	-	-	-	-	-
daN S	-	-	-	-	-	-	-	-	-	-
daN FR	-	-	-	-	-	-	-	-	-	-
daN FO	-	-	-	-	-	-	-	-	-	-
daN	-	45x2	53x2	42x2	45x2	74x2	14x2	30x2	-	31x1

Assali,Cuscinetto e Parafili per Ruote Serie 36/2-50/2-50/2FT
Axles, bearings and thread guards for wheels of the 36/2-50/2-50/2FT

Raccomandazione Adozione Assali per le varie tipologie di ruote
Recommendation for the adoption of axles in the different types of wheels

50LNx2	50LGx2	50LGdx2	50LGCCx2	50LGAx2	50LGcAx2	36SRx2 50LSRx2	36PUx2 50LPUx2	50/2/PU36	50230NSFx1
ITEM 56 -	ITEM 63 291	ITEM 71 291	ITEM 71 291	ITEM 63 291	ITEM 66 291	ITEM 63 291	ITEM 63 291	ITEM 63 291	ITEM 56 -
ITEM 63 291	ITEM 56 -	ITEM - -	ITEM - -	ITEM 56 -	ITEM - -	ITEM 56 -	ITEM 56 -	ITEM 56 -	ITEM 63 291
- -		ITEM 1000 -	ITEM - -	ITEM - -	ITEM - -	ITEM - -	ITEM - -	ITEM - -	ITEM - -

ITEM	63	ASSE VITE (648/RID)
gr	21	SCREW AXLE (648/RID)
	-	

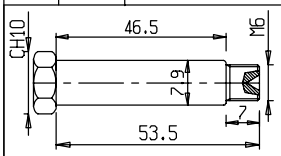

ITEM	71	ASSE VITE RID/M6x55
gr	14	SCREW AXLE RID/M6x55
	-	

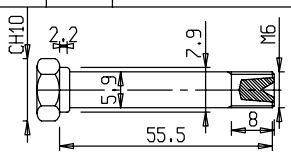

ITEM	291	M6
gr	2	M6
	-	

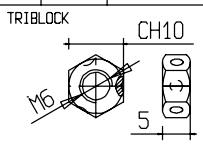

Peso per 1 pezzo = gr
Weight for a piece= gr

ITEM	56	ASSE RIB 50/2/ASR
gr	20	RIVETED AXLE 50/2/ASR
	-	

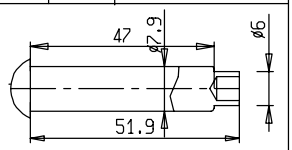

ITEM	8010	x	TUBINO
gr	4	2	TUBE

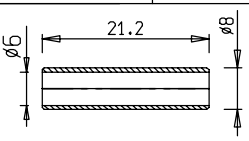

ITEM	gr	x	PARAFILI per RUOTE 50/LGd
362	2	4	THREADGUARDS for WHEELS 50/LGd

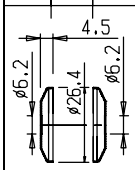

ITEM	gr	x	PARAFILI per RUOTE 50LGdA
391	3	4	THREADGUARDS for WHEELS 50LGdA

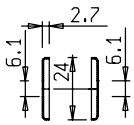

ITEM	gr	x	PARAFILI NYLON GRIS PER RUOTE 50/LGCC
377	2	4	GREY NYLON THREADGUARDS FOR WHEELS 50/LGCC

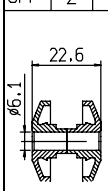

ITEM	gr	x	PARAFILI per RUOTE 50LGcA
391	4	2	THREADGUARDS for WHEELS 50LGcA
395		2	

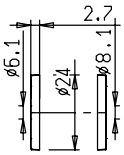

Gamma di Fissaggi Standard per Supporti Serie 36/2-50/2-50/2FT

Range of standard fixings for forks of the 36/2-50/2-50/2FT

A Foro Passante ø12.2
per Vite di Fissaggio Imbus M12x20
Rondella di Appoggio a Richiesta(*)
With bolt hole of ø12.2 for
fixing screw IMBUS M12x20
Supporting washer on request (*)

A Foro Passante ø9
per Vite di Fissaggio Imbus M8x25 (*)
With bolt hole of ø9 for
fixing screw IMBUS M8x25

A Foro Passante ø10.2
per Vite di Fissaggio Imbus M10x25 (*)
With bolt hole of ø10.2 for
fixing screw IMBUS M10x25

O

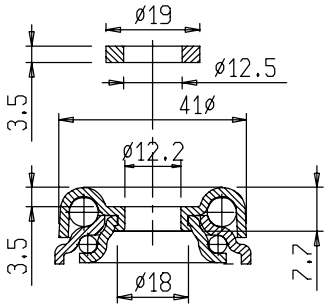

* Lunghezza della Vite Inseribile con Ruota Assemblata
* Length of screw that can be inserted with assembled wheel

B8 FORNIBILE SU RICHIESTA
AVAILABLE ON REQUEST

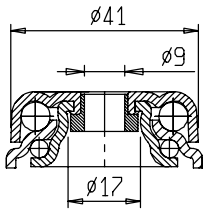

* Lunghezza della Vite Inseribile con Ruota Assemblata
* Length of screw that can be inserted with assembled wheel

B10

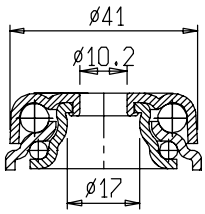

* Lunghezza della Vite Inseribile con Ruota Assemblata
* Length of screw that can be inserted with assembled wheel

A Perno Filettato Rivettato eo Vite Imbus fissata
Dimensioni da tabella da Specificare sempre all' Ordine
With riveted thread stem,and/or fixed Imbus screw
dimensions as per table to be specified when placing order

F

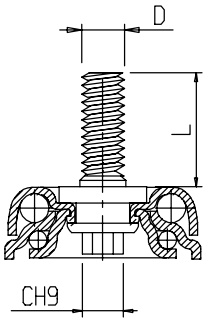

D	M10	M12
L	15-20-25-30	15-25

F

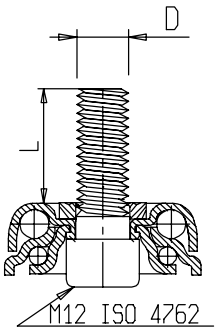

D	M12
L	9-13-18-23-28-33-38-43-53

Fissaggio a Piastra Integrale PI 60X60
Integral plate fixing PI 60x60

Fissaggio a Piastra Integrale P7 68.5x48
Integral plate fixing P7 68.5x 48

PI

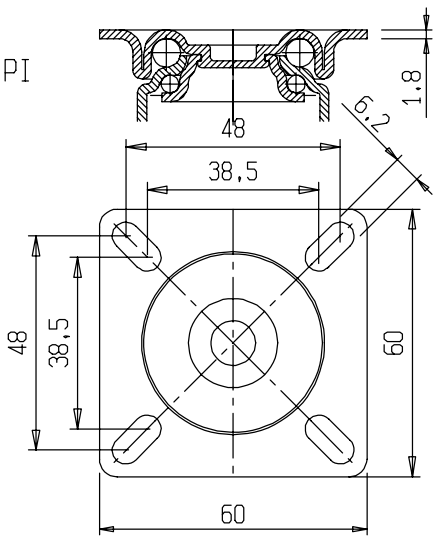

Diverse Asolature sono Eseguibili ,Inscritte nel Perimetro Esterno
Possibility of various slots made in the external perimeter

P7

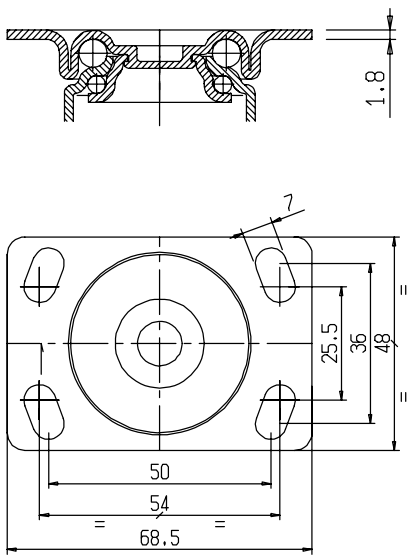

Diverse Asolature sono Eseguibili ,Inscritte nel Perimetro Esterno
Possibility of various slots made in the external perimeter

Supporti girevoli Serie 2 per i vari Diametri di Ruote e Gamma di Fissaggi
Swivel foks of the 2 series for the various wheels diameters and range of fixings

Materiale: Lamiera ferro secondo standard EN 10130
Trattamanto superficiale:Zincatura passivata UNI ISO 2081
Corona sfere superiore: n. 14 sfere 1/4" ingrassate
Corona sfere inferiore: n. 22 sfere 5/32" ingrassate
Material: Iron sheet subject to EN 10130
Surface treatment:passivated galvanisation subject to UNI ISO 2081
Upper ball crown N. 14 greased ball 1/4
Lower ball crown N. 22 greased ball 5/32

* La portata statica indicata per i soli supporti corrisponde a 1.5 portata dinamica verificata secondo UNI 12527 montando una ruota in Nylon

* The static load capacity mentioned for the only forks correspond to 1.5 dynamic load capacity checked according to UNI 12527 assembling with a nylon wheel

daN S Portata Statica conforme UNI EN 12527 * — gr = Peso per 1 pezzo

daN S Static Load Caspacity conform UNI EN 12527 * — gr = Weight for a piece

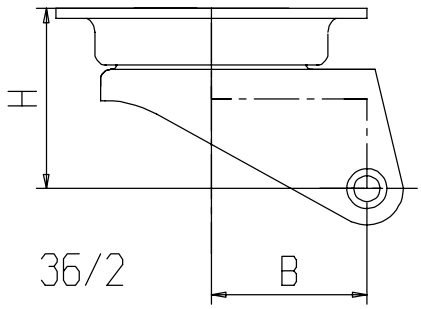

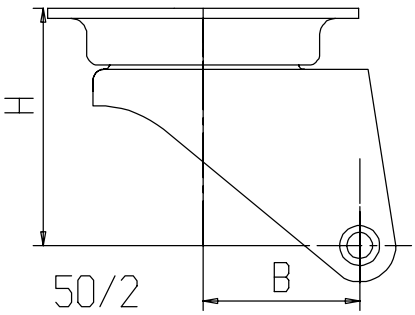

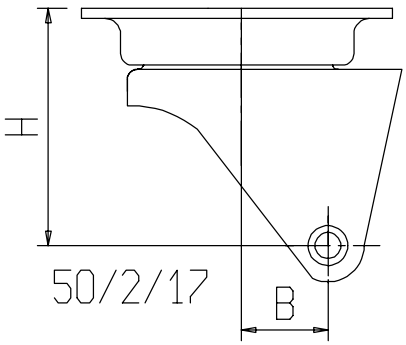

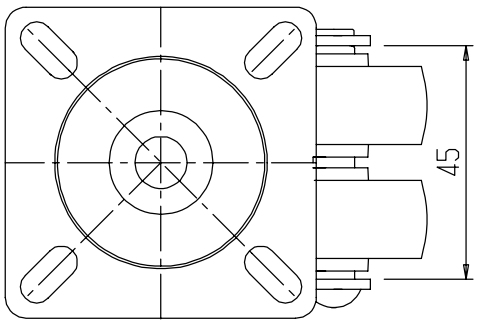

ITEM	gr		Rondella Washer
123	5	-	

	0	B10 ø10.2 a Richiesta On request B8 ø9	F	PI 60x60	P7 68.5x48
	ø12.2	ø10.2	M10 M12 L CH9		
ITEM	36/2/0	36/2/B10	36/2/F	36/2/PI	36/2/P7
H	36	36	36	36	36
B	30	30	30	30	30
daN S	60	60	60	60	60
gr	105	133	154	172	169
ITEM	50/2/0	50/2/B10	50/2/F	50/2/PI	50/2/P7
H	47	47	47	47	47
B	31	31	31	31	31
daN S	60	60	60	60	60
gr	141	147	172	190	187
ITEM	50/2/0/17	50/2/B10/17	50/2/F/17	50/2/PI/17	50/2/P7/17
H	47	47	47	47	47
B	17	17	17	17	17
daN S	67	67	67	67	67
gr	141	147	172	190	187

Supporti girevoli con freno Serie 2FT per i vari Diametri di Ruote e Gamma di Fissaggi
Swivel forks with brake of the 2FT series for the various wheels diameters and range of fixings

Materiale: Lamiera ferro secondo standard EN 10130
Trattamanto superficiale;Zincatura passivata UNI ISO 2081
Corona sfere superiore: n. 14 sfere 1/4" ingrassate
Corona sfere inferiore: n. 22 sfere 5/32" ingrassate
Material: Iron sheet subject to EN 10130
Surface treatment;passivated galvanisation subject to UNI ISO 2081
Upper ball crown N. 14 greased ball 1/4
Lower ball crown N. 22 greased ball 5/32

daN S Portata Statica conforme UNI EN 12527 * gr = Peso per 1 pezzo
daN S Static Load Caspacity conform UNI EN 12527 * gr = Weight for a piece

* La portata statica indicata per i soli supporti corrisponde a 1.5 portata dinamica verificata secondo UNI 12527 montando una ruota in Nylon

* The static load capacity mentioned for the only forks correspond to 1.5 dynamic load capacity checked according to UNI 12527 assembling with a nylon wheel

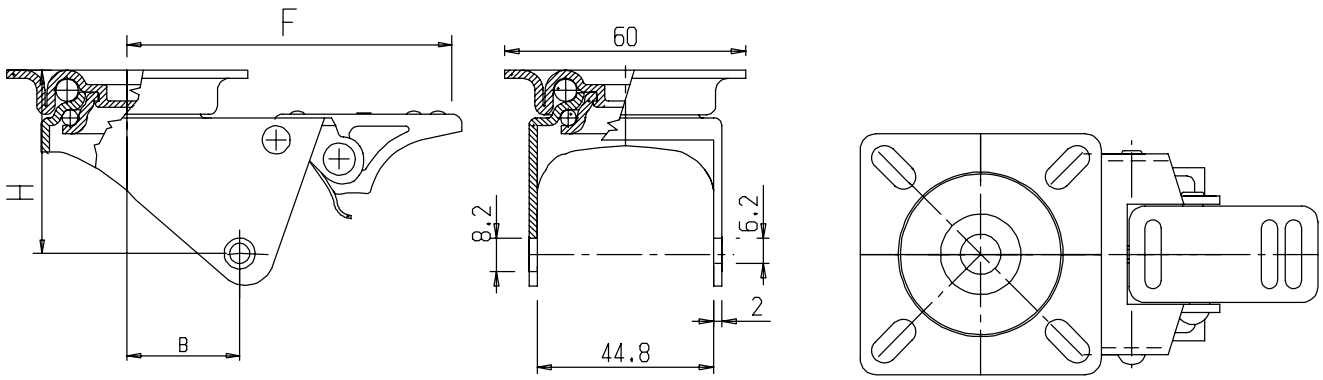

50/2FT

ITEM	gr		Rondella Washer
123	5	-	

	O	B10 ø10.2 a Richiesta On request B8 ø9	F	PI 60x60	P7 68.5x48
	ø12.2	ø10.2	M10 M12 L CH9		

ITEM	50/2FT/O	50/2FT/B10	50/2FT/F	50/2FT/PI	50/2FT/P7
H	47	47	47	47	47
B	28	28	28	28	28
F	84	84	84	84	84
daN S	52	52	52	52	52
gr	192	195	218	239	236

Complessivi girevoli Serie 36/2 nelle varie tipologie di:Fissaggi,Ruote assemblati
Swivel castors of the 36/2 series with different types of fixings, assembled wheels

Requisiti dei Complessivi assemblati alle varie Ruote Requirements of the castors assembled with the different wheels		N	SR	PU
Portata Dinamica conforme UNI EN 12527 Dynamic load capacity conform UNI EN 12527	D	40	45	60
Portata Statica conforme UNI EN 12527 Static load capacity conform UNI EN 12527	S	60	67.5	90

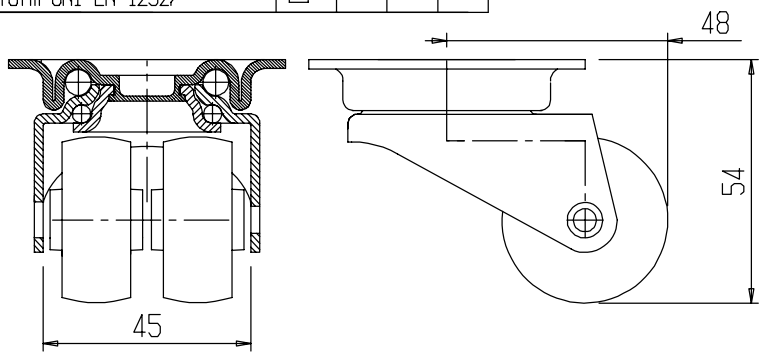

ITEM	gr	
123	5	-

gr = Peso per 1 pezzo

gr = Weight for a piece

	Rondella Washer	B10	F	PI 60x60	P7 68.5x48
	O ø12.2	ø10.2	M10 M12 L CH9		

	ITEM	36/2/N0	36/2/NB10	36/2/NF	36/2/NPI	36/2/NP7
36LNx2	gr	145	181	207	220	217
	ITEM	36/2/SR0	36/2/SRB10	36/2/SRF	36/2/SRPI	36/2/SRP7
36LSRx2	gr	143	179	205	220	217
	ITEM	36/2/PU0	36/2/PUB10	36/2/PUF	36/2/PUPI	36/2/PUP7
36LPUx2	gr	143	179	205	220	217

Complessivi girevoli Serie 50/2 nelle varie tipologie di:Fissaggi,Ruote assemblati
Swivel castors of the 50/2 series with different types of fixings, assembled wheels

Requisiti dei Complessivi assemblati alle varie Ruote Requirements of the castors assembled with the different wheels		N	G	Gd	GCC	GdA	GcA	SR	SRd	PU	PU36	NSF BIANCO WHITE NYLON
Portata Dinamica conforme UNI EN 12527 Dynamic load capacity conform UNI EN 12527	daN D	40	60	60	60	-	-	50	50	90	80	45
Portata Statica conforme UNI EN 12527 Static load capacity conform UNI EN 12527	daN S	60	90	90	90	-	-	75	75	135	120	67.5
Conducibilita'Elettrica conforme UNI EN 12527 Electric conductivity in compliance with UNI EN 12527	Ω hom					< 10.000						

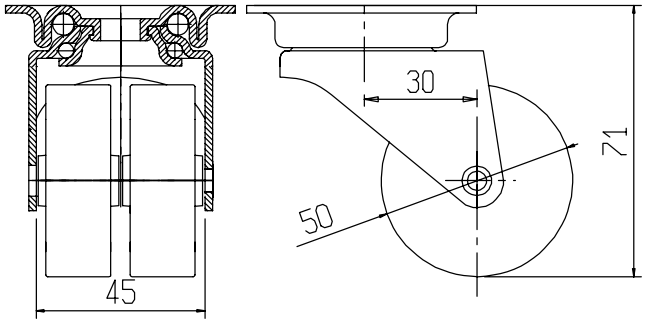

ITEM	gr	
123	5	-

gr = Peso per 1 pezzo
gr = Weight for a piece

		Rondella Washer	B10 ø10.2 a Richiesta On request B8 ø9	F	PI 60x60	P7 68.5x48
		0 ø12.2	ø10.2	M10 M12 CH9		
50LNx2	ITEM	50/2/N0	50/2/NB10	50/2/NF	50/2/NPI	50/2/NP7
	gr	196	202	209	225	222
50LGx2	ITEM	50/2/G0	50/2/GB10	50/2/GF	50/2/GPI	50/2/GP7
	gr	255	260	285	301	298
50LGdx2	ITEM	50/2/Gd0	50/2/GdB10	50/2/GdF	50/2/GdPI	50/2/GdP7
	gr	263	268	293	316	313
50LGCCx2	ITEM	50/2/GCC0	50/2/GCCB10	50/2/GCCF	50/2/GCCPI	50/2/GCCP7
	gr	259	264	289	306	303
50LGdAx2	ITEM	50/2/GdA0	50/2/GdAB10	50/2/GdAF	50/2/GdAPI	50/2/GdAP7
	gr	-	-	-	-	-
50LGcAx2	ITEM	50/2/GcA0	50/2/GcAB10	50/2/GcAF	50/2/GcAPI	50/2/GcAP7
	gr	-	-	-	-	-
50LSRx2	ITEM	50/2/SR0	50/2/SRB10	50/2/SRF	50/2/SRPI	50/2/SRP7
	gr	230	235	260	276	273
50LPUx2	ITEM	50/2/PU0	50/2/PUB10	50/2/PUF	50/2/PUPI	50/2/PUP7
	gr	253	258	293	300	297
502PU36	ITEM	50/2/PU360	50/2/PU36B10	50/2/PU36F	50/2/PU36PI	50/2/PU36P7
	gr	-	-	-	-	-
50230NSFx1	ITEM	50/2/NSF0	50/2/NSFB10	50/2/NSFF	50/2/NSFPI	50/2/NSFP7
	gr	193	199	206	222	219

Complessivi girevoli Serie 50/2/17 nelle varie tipologie di:Fissaggi,Ruote assemblati
Swivel castors of the 50/2/17 series with different types of fixings, assembled wheels

Requisiti dei Complessivi assemblati alle varie Ruote Requirements of the castors assembled with the different wheels		N	G	Gd	GCC	GdA	GcA	SR	SRd	PU	PU36	NSF BIANCO WHITE NYLON
Portata Dinamica conforme UNI EN 12527 Dynamic load capacity conform UNI EN 12527	daN D	45	60	60	60	-	-	40	40	100	-	70
Portata Statica conforme UNI EN 12527 Static load capacity conform UNI EN 12527	daN S	67	90	90	90	-	-	60	60	150	-	105
Conducibilita'Elettrica conforme UNI EN 12527 Electric conductivity in compliance with UNI EN 12527	Ω hom					< 10.000						

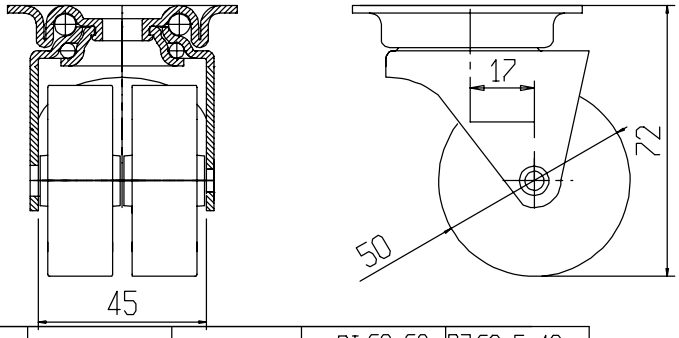

ITEM	gr	
123	5	-

gr = Peso per 1 pezzo
gr = Weight for a piece

		Rondella Washer	B10 ø10.2 a Richiesta On request B8 ø9	F	PI 60x60	P7 68.5x48
		0 ø12.2	ø10.2	M10 M12 L CH9		
50LNx2	ITEM	50/2/N0/17	50/2/NB10/17	50/2/NF/17	50/2/NPI/17	50/2/NP7/17
	gr	196	202	209	225	222
50LGx2	ITEM	50/2/G0/17	50/2/GB10/17	50/2/GF/17	50/2/GPI/17	50/2/GP7/17
	gr	255	260	285	301	298
50LGdx2	ITEM	50/2/Gd0/17	50/2/GdB10/17	50/2/GdF/17	50/2/GdPI/17	50/2/GdP7/17
	gr	263	268	293	316	313
50LGCCx2	ITEM	50/2/GCC0/17	50/2/GCCB10/17	50/2/GCCF/17	50/2/GCCPI/17	50/2/GCCP7/17
	gr	259	264	289	306	303
50LGdAx2	ITEM	50/2/GdA0/17	50/2/GdAB10/17	50/2/GdAF/17	50/2/GdAPI/17	50/2/GdAP7/17
	gr	-	-	-	-	-
50LGcAx2	ITEM	50/2/GcA0/17	50/2/GcAB10/17	50/2/GcAF/17	50/2/GcAPI/17	50/2/GcAP7/17
	gr	-	-	-	-	-
50LSRx2	ITEM	50/2/SR0/17	50/2/SRB10/17	50/2/SRF/17	50/2/SRPI/17	50/2/SRP7/17
	gr	230	235	260	276	273
50LPUx2	ITEM	50/2/PU0/17	50/2/PUB10/17	50/2/PUF/17	50/2/PUPI/17	50/2/PUP7/17
	gr	253	258	293	300	297
502PU36	ITEM	50/2/PU360/17	50/2/PU36B10/17	50/2/PU36F/17	50/2/PU36PI/17	50/2/PU36P7/17
	gr	-	-	-	-	-
50230NSFx1	ITEM	50/2/NSF0/17	50/2/NSFB10/17	50/2/NSFF/17	50/2/NSFPI/17	50/2/NSFP7/17
	gr	193	199	206	222	219

Complessivi girevoli con freno Serie 50/2FT nelle varie tipologie di:Fissaggi,Ruote assemblati
Swivel castors with brake of the 50/2FT series with different types of fixings, assembled wheels

Requisiti dei Complessivi assemblati alle varie Ruote Requirements of the castors assembled with the different wheels		N	G	Gd	GCC	GdA	GcA	SR	SRd	PU	PU36	NSF BIANCO WHITE NYLON
Portata Dinamica conforme UNI EN 12527 Dynamic load capacity conform UNI EN 12527	daN D	40	60	60	60	-	-	50	50	90	80	45
Portata Statica conforme UNI EN 12527 Static load capacity conform UNI EN 12527	daN S	60	90	90	90	-	-	75	75	135	120	67.5
Conducibilita'Elettrica conforme UNI EN 12527 Electric conductivity in compliance with UNI EN 12527	Ω hom				< 10.000							

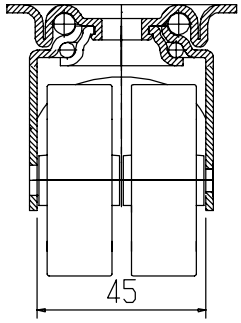

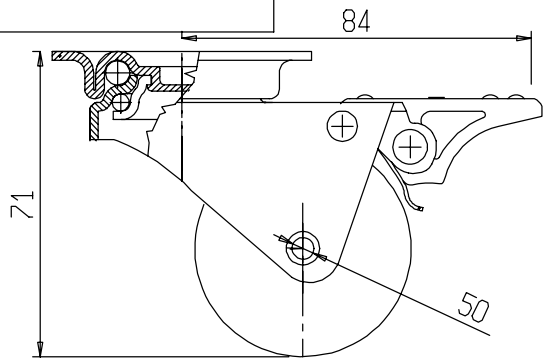

ITEM	gr	
123	5	-

gr = Peso per 1 pezzo
gr = Weight for a piece

		Rondella Washer	B10 ø10.2 a Richiesta On request B8 ø9	F	PI 60x60	P7 68.5x48
		0 ø12.2	ø10.2	M10 M12 L CH9		
50LNx2	ITEM	50/2FT/N0	50/2FT/NB10	50/2FT/NF	50/2FT/NPI	50/2FT/NP7
	gr	246	253	263	293	290
50LGx2	ITEM	50/2FT/G0	50/2FT/GB10	50/2FT/GF	50/2FT/GPI	50/2FT/GP7
	gr	304	311	330	351	348
50LGdx2	ITEM	50/2FT/Gd0	50/2FT/GdB10	50/2FT/GdF	50/2FT/GdPI	50/2FT/GdP7
	gr	312	319	338	367	364
50LGCCx2	ITEM	50/2FT/GCC0	50/2FT/GCCB10	50/2FT/GCCF	50/2FT/GCCPI	50/2FT/GCCP7
	gr	309	316	335	356	353
50LGdAx2	ITEM	50/2FT/GdA0	50/2FT/GdAB10	50/2FT/GdAF	50/2FT/GdAPI	50/2FT/GdAP7
	gr	-	-	-	-	-
50LGcAx2	ITEM	50/2FT/GcA0	50/2FT/GcAB10	50/2FT/GcAF	50/2FT/GcAPI	50/2FT/GcAP7
	gr	-	-	-	-	-
50LSRx2	ITEM	50/2FT/SR0	50/2FT/SRB10	50/2FT/SRF	50/2FT/SRPI	50/2FT/SRP7
	gr	279	286	305	326	323
50LPUx2	ITEM	50/2FT/PU0	50/2FT/PUB10	50/2FT/PUF	50/2FT/PUPI	50/2FT/PUP7
	gr	302	307	342	349	346
502PU36	ITEM	50/2FT/PU360	50/2FT/PU36B10	50/2FT/PU36F	50/2FT/PU36PI	50/2FT/PU36P7
	gr	-	-	-	-	-
50230NSFx1	ITEM	50/2FT/NSF0	50/2FT/NSFB10	50/2FT/NSFF	50/2FT/NSFPI	50/2FT/NSFP7
	gr	243	250	260	290	287

Ruote Adottate per Serie 75/2-75/2FT nelle varie tipologie di Diametri,Battistrada
Wheels used for 75/2-75/2FT series in the various types of diameters and tyres

Ruota tipo / Wheel type	G	Gd	GCC	GdA	GcA	PU	SR	SRd	-	N
Catteristiche del Battistrada / Tyre characteristics	Gomma Grigia / Grey Rubber			Gomma Conduttiva Nera / Conductive Black rubber		Poliuretano Colore Arancio / Polyuretane Orange Color	Gomma Sintetica Grigia / Synthetic Grey rubber			Nylon Nero / Black Nylon
Durezza del Battistrada conforme UNI EN 12527 / Tyre hardness in compliance with UNI EN 12527	shore A 76	76	76	85	85	85	78	78	-	>100
Temperature di Utilizzo Raccomandate / Recommended working temperatures	Max= +70°C	+70°C	+70°C	+40°C	+40°C	+40°C	+60°C	+60°C	-	+40°C
	Min= -30°C	-30°C	-30°C	-5°C	-5°C	-5 C	-10°C	-10°C	-	0°C
Catteristiche del Nucleo / Wheel centre characteristics	Nylon Nero / Black Nylon			Nylon Nero Conduttivo / Conductive Black Nylon		Nylon Bianco / White Nylon Foro Liscio	Polipropilene Grigio / Grey Polypropylene			
Catteristiche del Mozzo / Hub characteristics	Foro Liscio / Plain Bearing	Tubo Parafilo / Tube Threadguard	Cuscinetto a Sfera Parafilo / Ball Bearing Threadguard	Foro Liscio / Plain Bearing	Cuscinetto a Sfera Parafilo / Ball Bearing Threadguard	Plain Bearing	Foro Liscio / Plain Bearing	Tubo Parafilo / Tube Threadguard		Foro Liscio / Plain Bearing
Conducibilita'Elettrica conforme UNI EN 12527 / Electric conductivity in compliance with UNI EN 12527	hom / hom			-	-	gr = Peso per 1 pezzo / gr = Weight for a piece				
Portata Dinamica conforme UNI EN 12527 / Dynamic load capacity conform UNI EN 12527	daN D	Resistenza al Rotolamento (FR) alla Portata Nominale / Rolling resistance (FR) at rated capacity daN FR								
Portata Statica conforme UNI EN 12527 / Static load capacity conform UNI EN 12527	daN S	Resistenza al Superamento Ostacolo (FO) alla Portata Nominale H ostacolo=1% ø della Ruota Min 0.5 mm / Obstacle overcoming resistance (FO) at rated capacity obstacle H=1% of wheel, min. 0.5 mm daN FO								

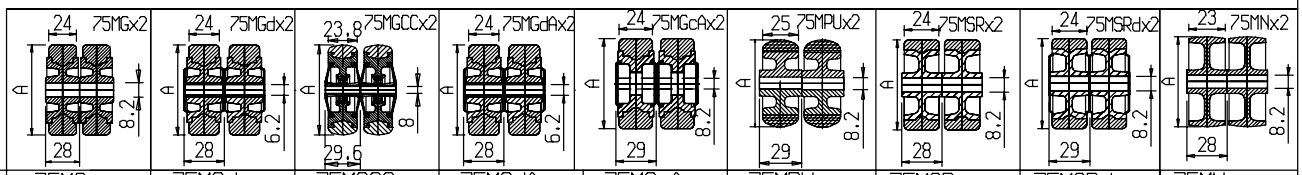

ITEM	75MG	75MGd	75MGCC	75MGdA	75MGcA	75MPU	75MSR	75MSRd	75MN
A	75	75	75	75	75	75	75	75	75
daN D	-	-	-	-	-	-	-	-	-
daN S	-	-	-	-	-	-	-	-	-
daN FR	-	-	-	-	-	-	-	-	-
daN FO	-	-	-	-	-	-	-	-	-
gr	125x2	142x2	112x2	137x2	-	86x2	62x2	80x2	43x2

Assali,Cuscinetto e Parafili per Ruote Serie 75/2-75/2FT

Axles, Bearings and Thread guards for wheels of the 75/2-75/2FT

Raccomandazione Adozione Assali per le varie tipologie di Ruote
Recommendation for the adoption of axles in the different types of wheels

75MGx2	75MGdx2	75MGCCx2	75MGdAx2	75MGcAx2	75MPUx2	75MSRx2	75MSRdx2	75MNx2
ITEM 46 291	ITEM 46 291	ITEM 46 291	ITEM 46 291	ITEM 46 291	ITEM 46 291	ITEM 46 291	ITEM 51 291	ITEM 45 -
ITEM 45 -	ITEM - -	ITEM - -	ITEM 45 -	ITEM - -	ITEM 45 -	ITEM 45 -	ITEM - -	ITEM 46 291
	ITEM 989 -	ITEM - -	ITEM 989 -	ITEM - -		ITEM - -	ITEM 989 -	ITEM - -

ITEM	46	ASSE VITE (861/RID/FT)
gr	28	SCREW AXLE (861/RID/FT)
	-	

ITEM	291	M8
gr	2	M8
	-	

ITEM	45	ASSE RIB 75/2/ASR
gr	26	RIVETED AXLE 75/2/ASR
	-	

ITEM	989	X	TUBINO
gr	60	2	TUBE

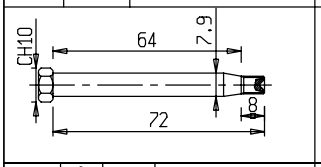

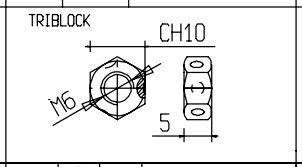

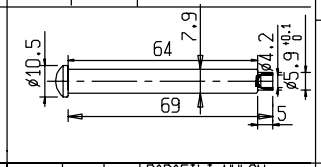

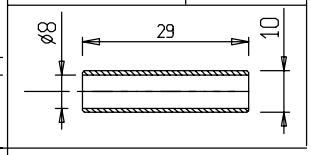

Peso per 1 pezzo = gr

Weight for a piece= gr

ITEM	gr	X	PARAFILI per RUOTE 75MGd
392	5	4	THREADGUARDS for WHEELS 75MGd

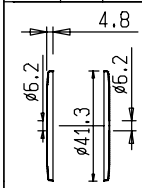

ITEM	gr	3	PARAFILI NYLON GRIS per RUOTE 75MGCC
388	X4	-	GREY NYLON THREADGUARD for WHEELS 75MGCC

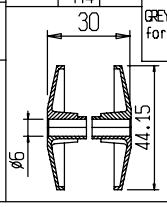

ITEM	gr	X	PARAFILI NYLON per RUOTE 75/M/SRd
355	4	4	NYLON THREADGUARDS for WHEELS 75/M/SRd

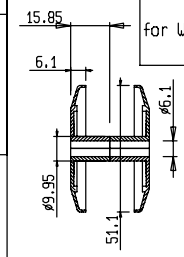

ITEM	SCELTA DI COLORI:
	COLOURS CHOICE:
GRIGIO/GREY	RAL 7037

Gamma di Fissaggi Standard per Supporti Serie 75/2-75/2FT

Range of standard fixings for forks of the 75/2-75/2FT

A Foro Passante ø10.2 per Vite di Fissaggio Imbus M10x25 (*)
With bolt hole of ø 10.2 for fixing screw IMBUS M10x25 (*)

A Foro Passante ø12.2 per Vite di Fissaggio Imbus M12x25 (*)
With bolt hole of ø 12.2 for fixing screw IMBUS M12x25 (*)

A Perno Filettato Rivettato eo Vite Imbus fissata Dimensioni da tabella da Specificare sempre all' Ordine
With riveted thread stem, and/or fixed Imbus screw dimensions as per table to be specified when placing order

B10

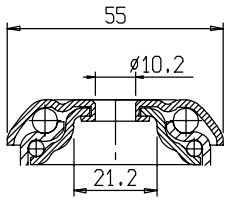

* Lunghezza della Vite Inseribile con Ruota Assemblata
* Length of screw that can be inserted with assembled wheel

B12

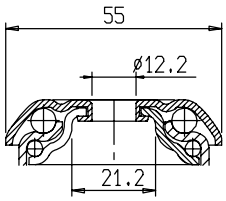

* Lunghezza della Vite Inseribile con Ruota Assemblata
* Length of screw that can be inserted with assembled wheel

F

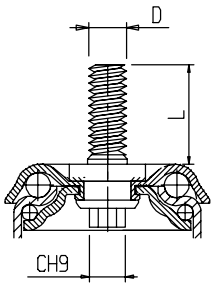

D	M10	M12
L	15-20-25-30	15-25

F

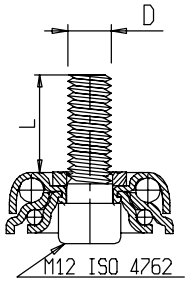

D	M12
L	9-13-18-23-28-33-38-43-53

Fissaggio a Piastra Integrale P1 60X60
Integral plate fixing P1 60x60

P1

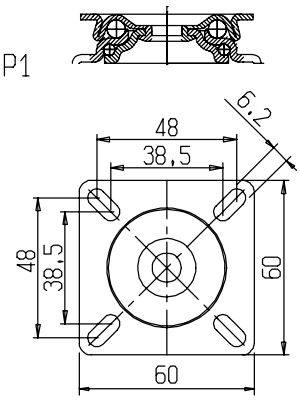

Diverse Asolature sono Eseguibili, Inscritte nel Perimetro Esterno
Possibility of various slots made in the external perimeter

Fissaggio a Piastra P2 105x85 + CHIODO 6080/P
PLATE FIXING P2 105X85 + NAIL 6080/P

P2

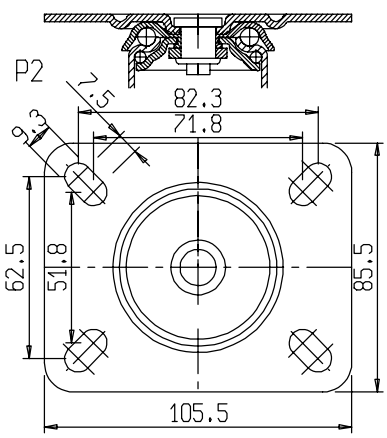

Diverse Asolature sono Eseguibili, Inscritte nel Perimetro Esterno
Possibility of various slots made in the external perimeter

Fissaggio a Piastra Integrale P3 77x67
Integral plate fixing P3 77X67

P3

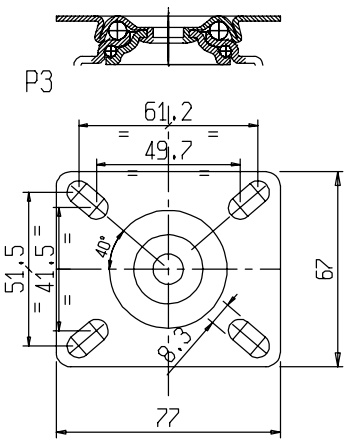

Diverse Asolature sono Eseguibili, Inscritte nel Perimetro Esterno
Possibility of various slots made in the external perimeter

Fissaggio a Piastra Integrale P6 92x65
Integral plate fixing P6 92X65

P6

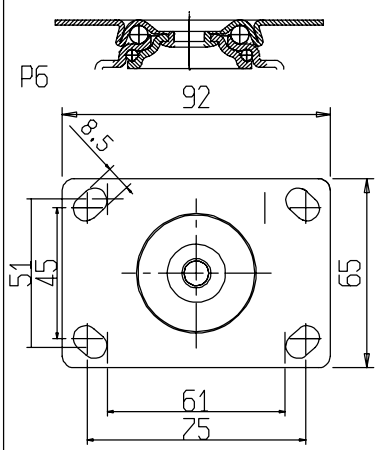

Diverse Asolature sono Eseguibili, Inscritte nel Perimetro Esterno
Possibility of various slots made in the external perimeter

Supporti girevoli serie 75/2 e supporti girevoli con freno 75/2FT
Swivel housings 75/2 and swivel housings with brake 75/2FT

Materiale: Lamiera ferro secondo standard EN 10130
Trattamanto superficiale Zincatura passivata UNI ISO 2081
Corona sfere superiore: n. 14 sfere 1/4" ingrassate
Corona sfere inferiore: n. 22 sfere 5/32" ingrassate
Material: Iron sheet EN 10130
Surface treatment passivated galvanisation subject to UNI ISO 2081
Upper ball crown N. 14 greased ball 1/4
Lower ball crown N. 22 greased ball 5/32

daN S Portata Statica conforme UNI EN 12527 * gr = Peso per 1 pezzo
daN S Static Load Caspacity conform UNI EN 12527 * gr = Weight for a piece

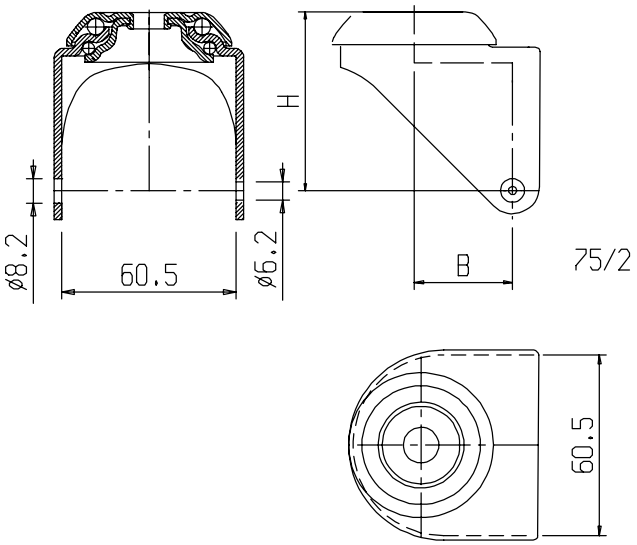

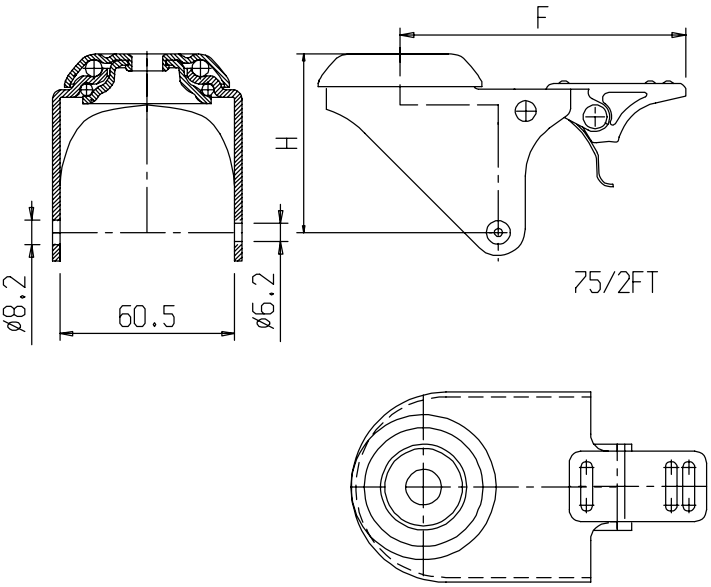

gr = Peso per 1 pezzo
gr = Weight for a piece

B10 ø10.2 | B12 ø12.2 | F M10 M12 CH9 | P1 60x60 | P2 105x85 | P3 77x67 | P6 92x65

ITEM	75/2/B10	75/2/B12	75/2/F	75/2/P1	75/2/P2	75/2/P3	75/2/P6
H	61.5	61.5	61.5	61.5	64	61.5	61.5
B	33	33	33	33	33	33	33
daN S	82	82	82	82	82	82	82
gr	271	271	300	299	445	320	347
ITEM	75/2FT/B10	75/2FT/B12	75/2FT/F	75/2FT/P1	75/2FT/P2	75/2FT/P3	75/2FT/P6
H	61.5	61.5	61.5	61.5	64	61.5	61.5
F	97	97	97	97	97	97	97
daN S	82	82	82	82	82	82	82
gr	345	345	373	373	519	394	421

Complessivi girevoli Serie 75/2 nelle varie tipologie di:Fissaggi,Ruote assemblati
Swivel castors of the 75/2 series with different types of fixings, assembled wheels

Requisiti dei Complessivi assemblati alle varie Ruote Requirements of the castors assembled with the different wheels		G	Gd	GCC	GdA	GcA	PU	SR	SRd	N
Portata Dinamica conforme UNI EN 12527 Dynamic load capacity conform UNI EN 12527	daN D	100	100	100	-	-	100	100	100	55
Portata Statica conforme UNI EN 12527 Static load capacity conform UNI EN 12527	daN S	150	150	150	-	-	150	150	150	82
Conducibilita'Elettrica conforme UNI EN 12527 Electric conductivity in compliance with UNI EN 12527	Ω hom				< 10.000					

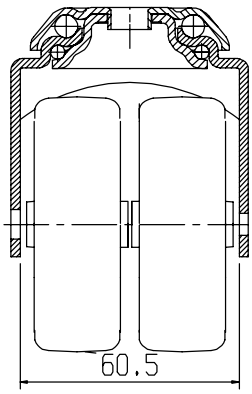

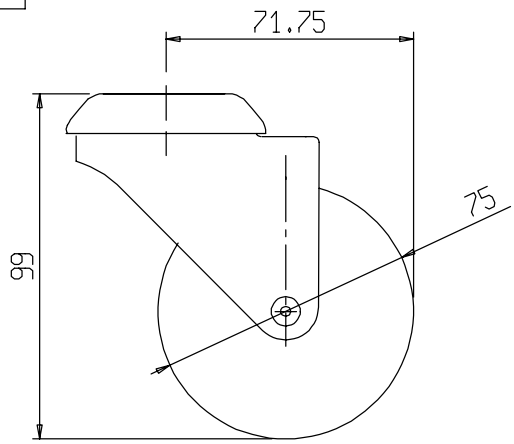

P2 ALTEZZA + 2.5 mm.
P2 HEIGHT + 2.5 mm

gr = Peso per 1 pezzo
gr = Weight for a piece

	B10	B12	F	P1 60x60	P2 105x85	P3 77x67	P6 92x65
	ø10.2	ø12.2	M10 M12 CH9				
75MGx2 ITEM	75/2/GB10	75/2/GB12	75/2/GF	75/2/GP1	75/2/GP2	75/2/GP3	75/2/GP6
gr	548	548	577	576	722	597	624
75MGdx2 ITEM	75/2/GdB10	75/2/GdB12	75/2/GdF	75/2/GdP1	75/2/GdP2	75/2/GdP3	75/2/GdP6
gr	587	587	618	617	763	638	665
75MGCCx2 ITEM	75/2/GCCB10	75/2/GCCB12	75/2/GCCF	75/2/GCCP1	75/2/GCCP2	75/2/GCCP3	75/2/GCCP6
gr	536	536	556	562	708	583	604
75MGdAx2 ITEM	75/2/GdAB10	75/2/GdAB12		75/2/GdAP1	75/2/GdAP2	75/2/GdAP3	75/2/GdAP6
gr	-	-	-	-		-	-
75MGcAx2 ITEM	75/2/GcAB10	75/2/GcAB12		75/2/GcAP1	75/2/GcAP2	75/2/GcAP3	75/2/GcAP6
gr	-	-	-	-		-	-
75MPUx2 ITEM	75/2/PUB10	75/2/PUB12	75/2/PUF	75/2/PUP1	75/2/PUP2	75/2/PUP3	75/2/PUP6
gr	548	548	577	576	722	597	624
75MSRx2 ITEM	75/2/SRB10	75/2/SRB12	75/2/SRF	75/2/SRP1	75/2/SRP2	75/2/SRP3	75/2/SRP6
gr	492	492	512	518	664	539	560
	-						
75MSRdx2 ITEM	75/2/SRdB10	75/2/SRdB12	75/2/SRdF	75/2/SRdP1	75/2/SRdP2	75/2/SRdP3	75/2/SRdP6
gr	538	538	558	564	710	585	606
75MNx2 ITEM	75/2/NB10	75/2/NB12	75/2/NF	75/2/NP1	75/2/NP2	75/2/NP3	75/2/NP6
gr	374	374	412	411	557	432	459

Complessivi girevoli con freno Serie 75/2FT nelle varie tipologie di:Fissaggi,Ruote assemblati
Swivel castors with brake of the 75/2FT series with different types of fixing, assembled wheels

Requisiti dei Complessivi assemblati alle varie Ruote Requirements of the castors assembled with the different wheels		G	Gd	GCC	GdA	GcA	PU	SR	SRd	N
Portata Dinamica conforme UNI EN 12527 Dynamic load capacity conform UNI EN 12527	daN D	100	100	100	-	-	100	100	-	60
Portata Statica conforme UNI EN 12527 Static load capacity conform UNI EN 12527	daN S	150	150	150	-		150	150	-	90
Resistenza Passiva del Dispositivo Frenante Conforme UNI EN 12527 Passive resistance of braking device compliance with UNI EN 12527	daN FT	40	40	40	-	-	-	-		25
Conducibilita Elettrica conforme UNI EN 12527 Electric conductivity in compliance with UNI EN 12527	Ω hom				< 10.000					

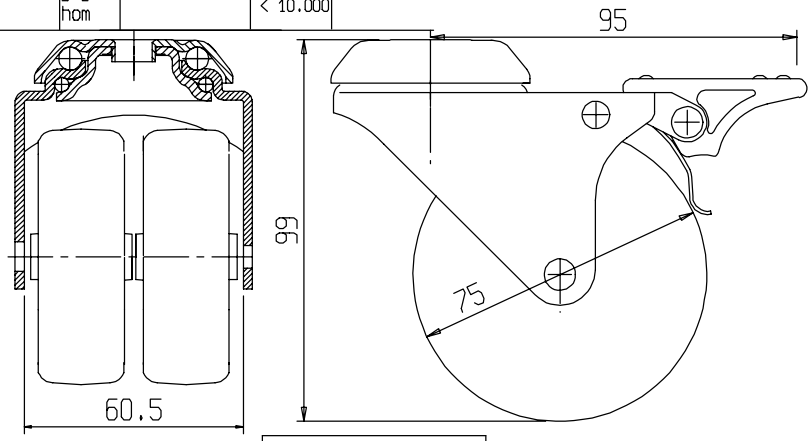

P2 ALTEZZA + 2.5 mm.
P2 HEIGHT + 2.5 mm

gr = Peso per 1 pezzo
gr = Weight for a piece

B10 ø10.2 — B12 ø12.2 — F M10 M12 CH9 — P1 60x60 — P2 105x85 — P3 77x67 — P6 92x65

	ITEM	B10	B12	F	P1 60x60	P2 105x85	P3 77x67	P6 92x65
75MGx2		75/2FT/GB10	75/2FT/GB12	75/2FT/GF	75/2FT/GP1	75/2FT/GP2	75/2FT/GP3	75/2FT/GP6
	gr	624	624	653	652	798	673	700
75MGdx2		75/2FT/GdB10	75/2FT/GdB12	75/2FT/GdF	75/2FT/GdP1	75/2FT/GdP2	75/2FT/GdP3	75/2FT/GdP6
	gr	663	663	692	691	837	712	739
		-			-			
75MGCCx2		75/2FT/GCCB10	75/2FT/GCCB12	75/2FT/GCCF	75/2FT/GCCP1	75/2FT/GCCP2	75/2FT/GCCP3	75/2FT/GCCP6
	gr	608	608	636	636	782	657	663
75MGdAx2		75/2FT/GdAB10	75/2FT/GdAB12		75/2FT/GdAP1	75/2FT/GdAP2	75/2FT/GdAP3	75/2FT/GdAP6
	gr	-	-	-	-		-	-
75MGcAx2		75/2FT/GcAB10	75/2FT/GcAB12		75/2FT/GcAP1	75/2FT/GcAP2	75/2FT/GcAP3	75/2FT/GcAP6
	gr	-	-	-	-		-	-
75MPUx2		75/2FT/PUB10	75/2FT/PUB12	75/2FT/PUF	75/2FT/PUP1	75/2FT/PUP2	75/2FT/PUP3	75/2FT/PUP6
	gr	622	622	651	650	796	671	698
75MSRx2		75/2FT/SRB10	75/2FT/SRB12	75/2FT/SRF	75/2FT/SRP1	75/2FT/SRP2	75/2FT/SRP3	75/2FT/SRP6
	gr	568	568	588	594	740	615	636
75MSRdx2		75/2FT/SRdB10	75/2FT/SRdB12	75/2FT/SRdF	75/2FT/SRdP1	75/2FT/SRdP2	75/2FT/SRdP3	75/2FT/SRdP6
	gr	614	614	634	640	786	661	682
75MNx2		75/2FT/NB10	75/2FT/NB12	75/2FT/NF	75/2FT/NP1	75/2FT/NP2	75/2FT/NP3	75/2FT/NP6
	gr	457	457	486	485	631	506	533

Ruote adottate per Serie 36/2 30, 36/2 30F, 50/2 30, 50/2 30FT, 65/2 30, 65/2 30FT, nelle varie tipologie di battistrada
Wheels used for 36/2 30, 36/2 30FT, 50/2 30, 50/2 30FT, 65/2 30, 65/2 30FT, in the various types of tyres

Ruota tipo Wheel type	PU		SR	N	Nd	NSF
Catteristiche del Battistrada Tyre characteristics	Poliuretano Color Arancio, su richiesta Colore Grigio. Polyurethane Orange Color on request Grey Color.		Gomma Sintetica Synthetic Rubber	Nylon Nero Black Nylon	Nylon Nero Black Nylon	Nylon Bianco White Nylon
Durezza del Battistrada conforme UNI EN 12527 Tyre hardness in compliance with UNI EN 12527	shore A	85	78	>100	>100	>100
Temperature di Utilizzo Raccomandate Recommended working temperatures	Max=	+40°C	+60°C	+40°C	+40°C	+40°C
	Min=	-5 C	-10°C	0°C	0°C	0°C
Catteristiche del Nucleo Wheel centre characteristics	Nylon Bianco White Nylon		Polipropilene Grigio Grey Polipropylene			
Catteristiche del Mozzo Hub characteristics	Foro Liscio Plain Bearing		Foro Liscio Plain Bearing	Foro Liscio Plain Bearing	Foro Liscio Plain Bearing	Foro Liscio Plain Bearing

Conducibilita'Elettrica conforme UNI EN 12527 hom
Electric conductivity in compliance with UNI EN 12527 hom

gr = Peso per 1 pezzo
gr = Weight for a piece

Portata Dinamica conforme UNI EN 12527 — daN D
Dynamic load capacity conform UNI EN 12527

Resistenza al Rotolamento (FR) alla Portata Nominale — daN FR
Rolling resistance (FR) at rated capacity

Portata Statica conforme UNI EN 12527 — daN S
Static load capacity conform UNI EN 12527

Resistenza al Superamento Ostacolo (FO) alla Portata Nominale H ostacolo=1% ø della Ruota Min 0.5 mm — daN FO
Obstacle overcoming resistance (FO) at rated capacity obstacle H=1% of wheel, min. 0.5 mm

	36LPUx2	36LSRx2	36LNx2
	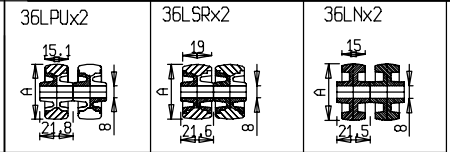		
ITEM	36LPU	36LSR	36LN
A	36	36	36
D	-	-	-
S	-	-	-
FR	0.6	0.6	-
FO	3.5	3.5	-
gr	14.5 x2	12 x2	12 x2

	50LPUx2	50LNx2 SPESSA	5023ONSFx1
	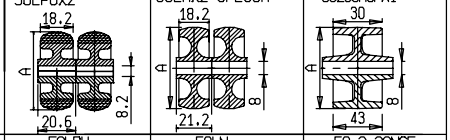		
ITEM	50LPU	50LN	50 2 30NSF
A	50	50	50
D	80		
S	120		
FR			
FO			
gr	30 x2	17 x2	31 x1

	65MN X 2	65MNd X 2
	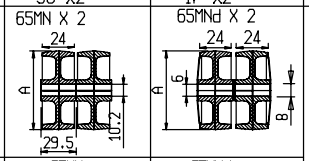	
ITEM	65MN	65MNd
A	65	65
D	-	-
S	-	-
FR	-	-
FO	-	-
gr		

Assali e parafili per ruote Serie 36/2 30, 36/2 30FT, 50/2 30, 50/2 30FT, 65/2 30, 65/2 30FT
Axles, thread guards fo wheels 36/2 30, 36/2 30FT, 50/2 30, 50/2 30FT, 65/2 30, 65/2 30FT Series

Raccomandazione adozione assali per le varie tipologie di ruote
Recommendation for the adoption of axles in the different types of wheels

36LPUx2
50LPUx2

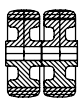

ITEM	63	291

36LSRx2

ITEM	63	291

36LNx2
50LNx2 SPESSA

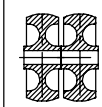

ITEM	56	-
ITEM	63	291
ITEM	-	-

5023ONSFx1

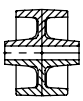

ITEM	56	-
ITEM	63	291
ITEM	-	-

65MN X 2

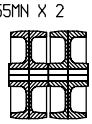

ITEM	46	291
ITEM	984	-

65MNd X 2

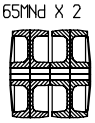

ITEM	46	291
ITEM	984	-

ITEM	63	ASSE 648 RID
gr	-	AXLE 648 RID
	-	

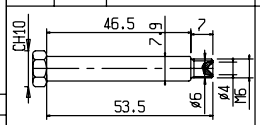

ITEM	291	M8
gr	2	M8
	-	

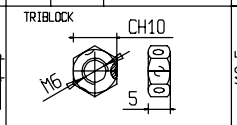

ITEM	56	ASSE 50/2/ASR
gr	-	AXLE 50/2/ASR
	-	

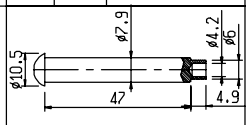

ITEM	46	ASSE VITE (861/RID/FT)
gr	28	SCREW AXLE (861/RID/FT)
	-	

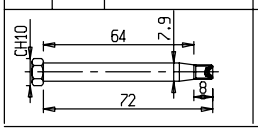

ITEM	291	M8
gr	2	M8
	-	

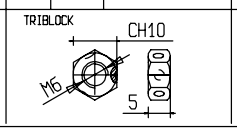

ITEM	984	X	TUBINO
gr	-	-	TUBE

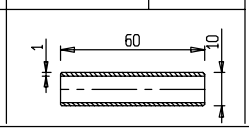

ITEM	gr		PARAFILI per RUOTE 65MNd
400 401	-	-	

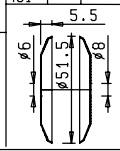

THREADGUARDS for WHEELS 65MNd

Gamma di Fissaggi Standard per Supporti Serie 36/2 30,36/2 30FT, 50/2 30, 50/2 30FT, 65/2 30, 65/2 30FT

Range of standard fixings for forks of the 36/2 30, 36/2 30FT 50/2 30,50/2 30FT, 65/2 30, 65/2 30FT

A Foro Passante ø10.2
per Vite di Fissaggio Imbus M10x25 (*)
With bolt hole of ø 10.2 for fixing screw IMBUS M10x25 (*)

B10

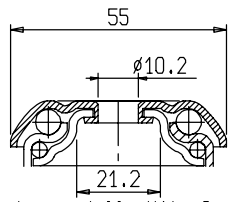

* Lunghezza della Vite Inseribile con Ruota Assemblata
* Length of screw that can be inserted with assembled wheel

A Foro Passante ø12.2
per Vite di Fissaggio Imbus M12x25 (*)
With bolt hole of ø 12.2 for fixing screw IMBUS M12x25 (*)

B12

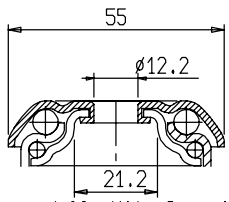

* Lunghezza della Vite Inseribile con Ruota Assemblata
* Length of screw that can be inserted with assembled wheel

A Perno Filettato Rivettato e/o Vite Imbus Fissata dimensioni come da tabella da specificare sempre all'ordine
With Riveted Thread Stem and/or Fixed Imbus Screw dimensions as per table to be specified when placing order

F

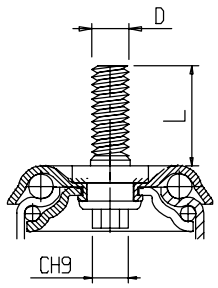

D	M10	M12
L	15-20-25-30	15-25

F

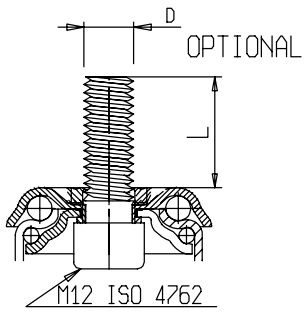

D	M12
L	9-13-18-23-28-33-38-43-53

Fissaggio a Piastra Integrale P1 60X60
Integral plate fixing P1 60x60

P1

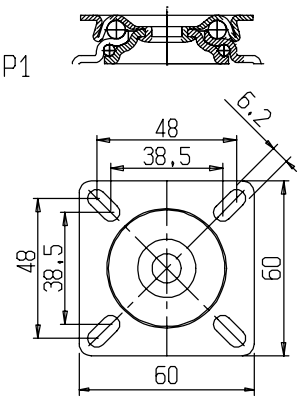

Diverse Asolature sono Eseguibili, Inscritte nel Perimetro Esterno
Possibility of various slots made in the external perimeter

Fissaggio a Piastra P2 105x85 + CHIODO 6080/P
PLATE FIXING P2 105X85 + NAIL 6080/P

P2

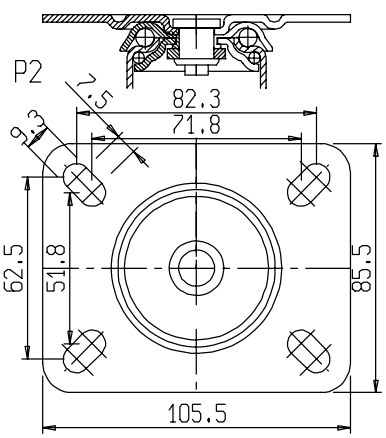

Diverse Asolature sono Eseguibili, Inscritte nel Perimetro Esterno
Possibility of various slots made in the external perimeter

Fissaggio a Piastra Integrale P3 77x67
Integral plate fixing P3 77X67

P3

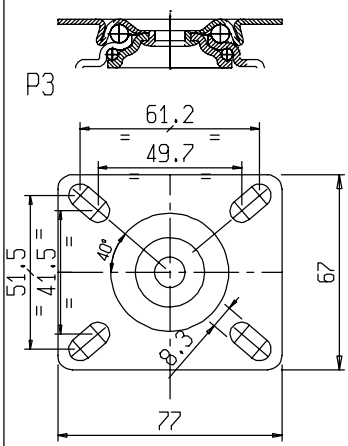

Diverse Asolature sono Eseguibili, Inscritte nel Perimetro Esterno
Possibility of various slots made in the external perimeter

Fissaggio a Piastra Integrale P6 92x65
Integral plate fixing P6 92X65

P6

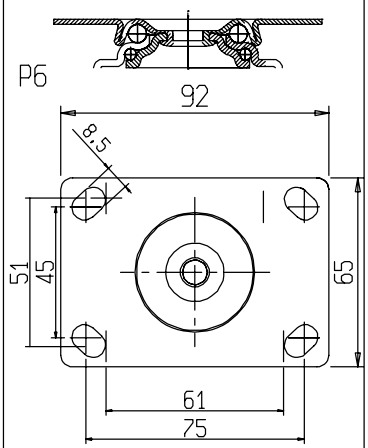

Diverse Asolature sono Eseguibili, Inscritte nel Perimetro Esterno
Possibility of various slots made in the external perimeter

Supporti girevoli Serie 36/230 e supporti girevoli con freno 36/230FT
Swivel forks 36/230 and swivel forks with brake 36/230FT

Materiale: Lamiera ferro secondo standard EN 10130
Trattamanto superficiale Zincatura passivata UNI ISO 2081
Corona sfere superiore: n. 14 sfere 1/4" ingrassate
Corona sfere inferiore: n. 22 sfere 5/32" ingrassate
Material: Iron sheet EN 10130
Surface treatment passivated galvanisation subject to UNI ISO 2081
Upper ball crown N. 14 greased ball 1/4
Lower ball crown N. 22 greased ball 5/32

daN S Portata Statica conforme UNI EN 12527 * gr = Peso per 1 pezzo
daN S Static Load Capacity conform UNI EN 12527 * gr = Weight for a piece

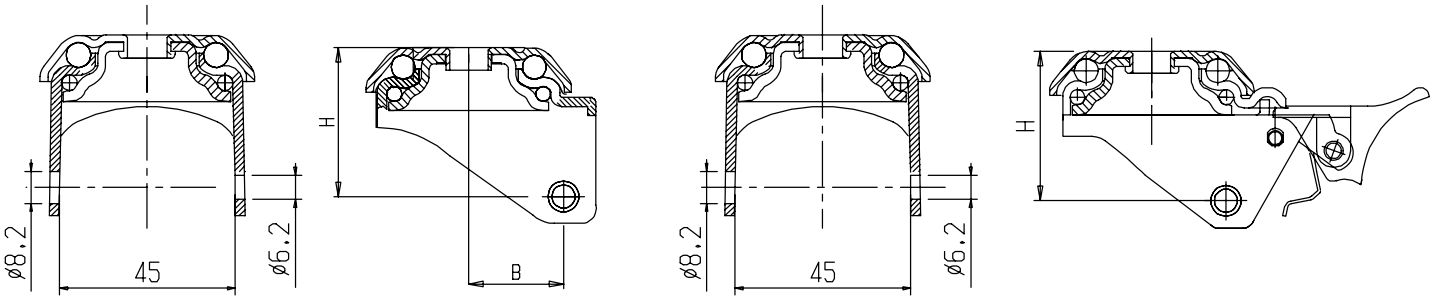

36/2 30FT

36/2 30

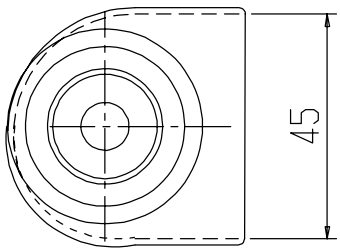

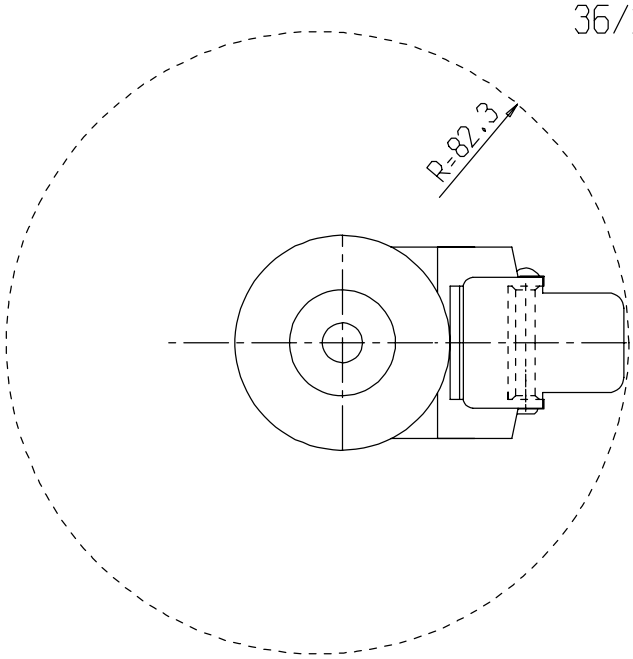

	B10 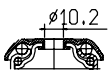	B12 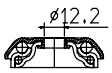	F 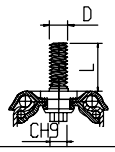	P1 60x60 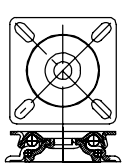	P3 77x67 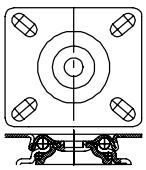	P6 92x65 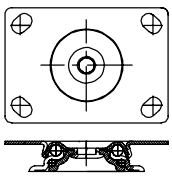
ITEM	36/2 30/B10	36/2 30/B12	36/2 30/F	36/2 30/P1	36/2 30/P3	36/2 30/P6
H	-	-	-	-	-	-
B	-	-	-	-	-	-
daN S	-	-	-	-	-	-
gr	-	-	-	-	-	-
ITEM	36/2 30FT/B10	36/2 30FT/B12	36/2 30FT/F	36/2 30FT/P1	36/2 30FT/P3	36/2 30FT/P6
H	-	-	-	-	-	-
F	-	-	-	-	-	-
daN S	-	-	-	-	-	-
gr	-	-	-	-	-	-

Complessivi girevoli Serie 36/230 e 36/230FT nelle varie tipologie di:Fissaggi,Ruote assemblati
Swivel castors of the 36/230- 36/230FT with different types of fixings, assembled wheels

Requisiti dei Complessivi assemblati alle varie Ruote Requirements of the castors assembled with the different wheels		PU	SR	N
Portata Dinamica conforme UNI EN 12527 Dynamic load capacity conform UNI EN 12527	daN D	100	45	140
Portata Statica conforme UNI EN 12527 Static load capacity conform UNI EN 12527	daN S	150	67.5	210

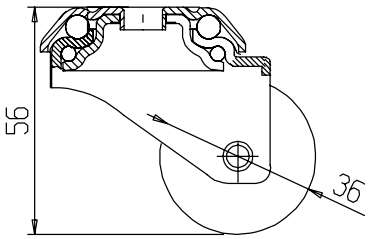

gr = Peso per 1 pezzo
gr = Weight for a piece

		B10	B12	F	P1 60x60	P3 77x67	P6 92x65
		ø10.2	ø12.2	D, L, CH9			
36LPUx2	ITEM	36/2 30/PUB10	36/2 30/PUB12	36/2 30/PUF	36/2 30/PUP1	36/2 30/PUP3	36/2 30/PUP6
	gr	-	-	-	-	-	-
36LSRX2	ITEM	36/2 30/SRB10	36/2 30/SRB12	36/2 30/SRF	36/2 30/SRP1	36/2 30/SRP3	36/2 30/SRP6
	gr	-	-	-	-	-	-
36LNx2	ITEM	36/2 30/NB10	36/2 30/NB12	36/2 30/NF	36/2 30/NP1	36/2 30/NP3	36/2 30/NP6
	gr	-	-	-	-	-	-

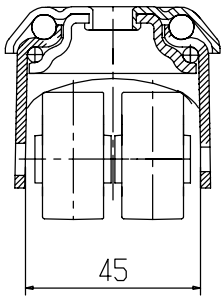

Requisiti dei Complessivi assemblati alle varie Ruote Requirements of the castors assembled with the different wheels		PU	SR	N
Portata Dinamica conforme UNI EN 12527 Dynamic load capacity conform UNI EN 12527	daN D	100	45	140
Portata Statica conforme UNI EN 12527 Static load capacity conform UNI EN 12527	daN S	150	67.5	210
Resistenza Passiva del Dispositivo Frenante Conforme UNI EN 12527 Passive resistance of braking device in compliance with UNI EN 12527	daN FT			

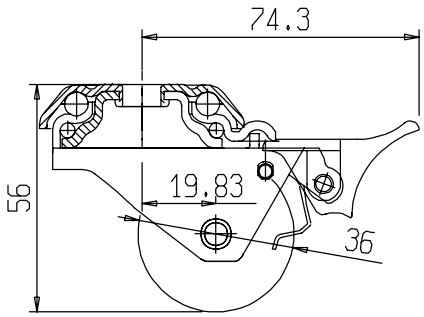

36LPUx2	ITEM	36/2 30FT/PUB10	36/2 30FT/PUB12	36/2 30FT/PUF	36/2 30FT/PUP1	36/2 30FT/PUP3	36/2 30FT/PUP6
	gr	-	-	-	-	-	
36LSRX2	ITEM	36/2 30FT/SRB10	36/2 30FT/SRB12	36/2 30FT/SRF	36/2 30FT/SRP1	36/2 30FT/SRP3	36/2 30FT/SRP6
	gr	-	-	-	-	-	-
36LNx2	ITEM	36/2 30FT/NB10	36/2 30FT/NB12	36/2 30FT/NF	36/2 30FT/NP1	36/2 30FT/NP3	36/2 30FT/NP6
	gr	-	-	-	-	-	-

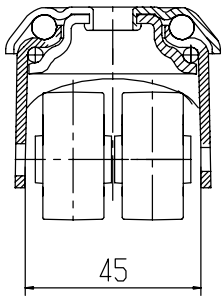

Supporti girevoli Serie 50/230 e supporti girevoli con freno 50/230FT
Swivel forks 50/230 and swivel forks with brake 50/230FT

Materiale: Lamiera ferro secondo standard EN 10130
Trattamanto superficiale Zincatura passivata UNI ISO 2081
Corona sfere superiore: n. 14 sfere 1/4" ingrassate
Corona sfere inferiore: n. 22 sfere 5/32" ingrassate
Material: Iron sheet EN 10130
Surface treatment passivated galvanisation subject to UNI ISO 2081
Upper ball crown N. 14 greased ball 1/4
Lower ball crown N. 22 greased ball 5/32

daN S Portata Statica conforme UNI EN 12527 * gr = Peso per 1 pezzo
daN S Static Load Capacity conform UNI EN 12527 * gr = Weight for a piece

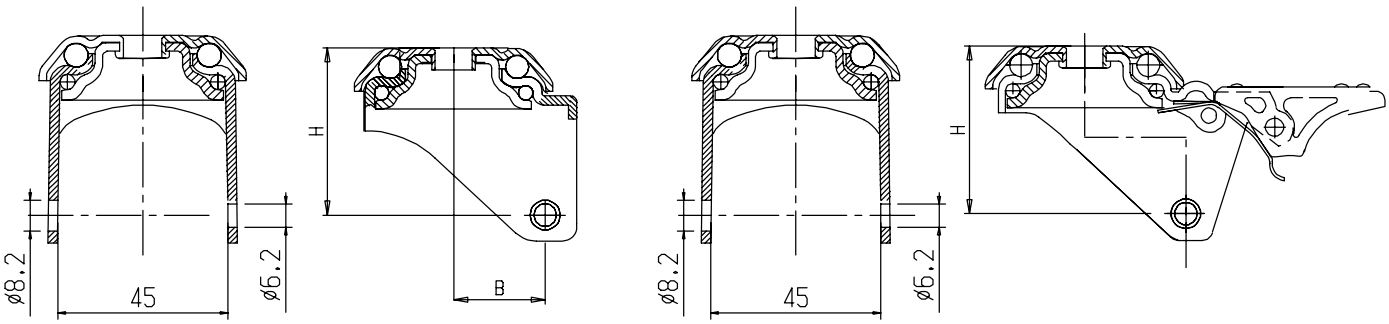

50/2 30FT

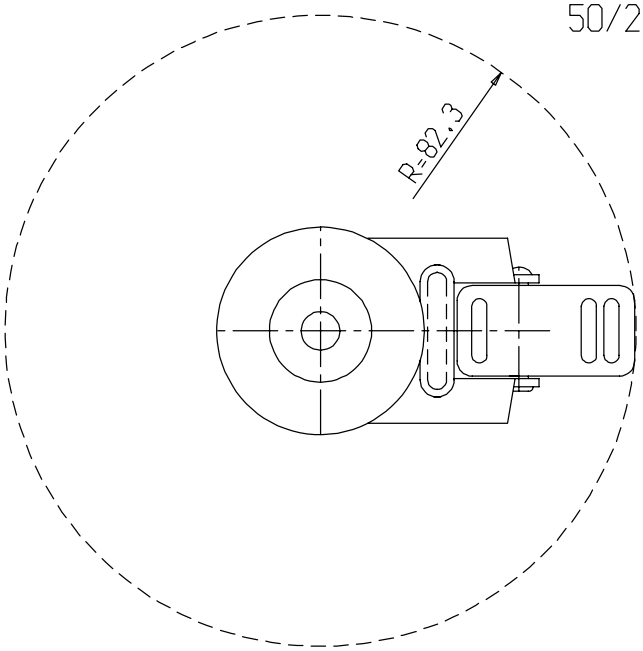

50/2 30

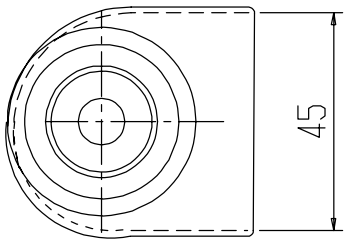

	B10 ø10.2	B12 ø12.2	F D L CH9	P1 60x60	P3 77x67	P6 92x65
ITEM	50/2 30/B10	50/2 30/B12	50/2 30/F	50/2 30/P1	50/2 30/P3	50/2 30/P6
H	46.5	46.5	46.5	46.5	46.5	46.5
B	28	28	28	28	28	28
daN S	135	135	135	135	135	135
gr	176	176	217	200	213	229
ITEM	50/2 30FT/B10	50/2 30FT/B12	50/2 30FT/F	50/2 30FT/P1	50/2 30FT/P3	50/2 30FT/P6
H	46.5	46.5	46.5	46.5	46.5	46.5
F	83.2	83.2	83.2	83.2	83.2	83.2
daN S	135	135	135	135	135	135
gr	226	226	267	250	263	279

Complessivi girevoli Serie 50/230 e 50/230FT nelle varie tipologie di:Fissaggi,Ruote assemblati
Swivel castors of the 50/230- 50/230FT with differrent types of fixings, assembled wheels

Requisiti dei Complessivi assemblati alle varie Ruote Requirements of the castors assembled with the different wheels		PU	N	NSF BIANCO WHITE NYLON
Portata Dinamica conforme UNI EN 12527 Dynamic load capacity conform UNI EN 12527	daN D	130	90	80
Portata Statica conforme UNI EN 12527 Static load capacity conform UNI EN 12527	daN S	195	135	120

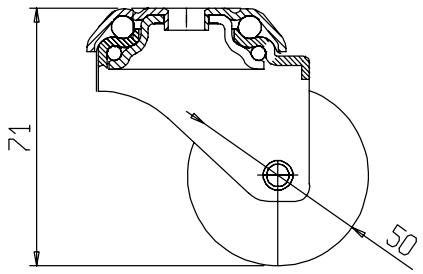

gr = Peso per 1 pezzo
gr = Weight for a piece

		B10	B12	F	P1 60x60	P3 77x67	P6 92x65
		ø10.2	ø12.2	D, L, CH9			
50LPUx2	ITEM	50/2 30/PUB10	50/2 30/PUB12	50/2 30/PUF	50/2 30/PUP1	50/2 30/PUP3	50/2 30/PUP6
	gr	274	274	310	303	316	332
50LNx2	ITEM	50/2 30/NB10	50/2 30/NB12	50/2 30/NF	50/2 30/NP1	50/2 30/NP3	50/2 30/NP6
	gr	256	256	292	280	293	314
50230NSFx1	ITEM	50/2 30/NSFB10	50/2 30/NSFB12	50/2 30/NSFF	50/2 30/NSFP1	50/2 30/NSFP3	50/2 30/NSFP6
	gr	242	242	280	268	281	302

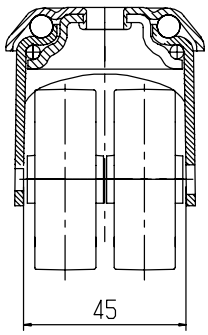

Requisiti dei Complessivi assemblati alle varie Ruote Requirements of the castors assembled with the different wheels		PU	N	NSF BIANCO WHITE NYLON
Portata Dinamica conforme UNI EN 12527 Dynamic load capacity conform UNI EN 12527	daN D	130	90	80
Portata Statica conforme UNI EN 12527 Static load capacity conform UNI EN 12527	daN S	195	135	120
Resistenza Passiva del Dispositivo Frenante Conforme UNI EN 12527 Passive resistance of braking device in compliance with UNI EN 12527	daN FT			

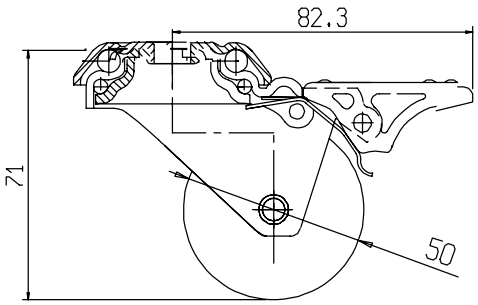

50LPUx2	ITEM	50/2 30FT/PUB10	50/2 30FT/PUB12	50/2 30FT/PUF	50/2 30FT/PUP1	50/2 30FT/PUP3	50/2 30FT/PUP6
	gr	324	324	359	352	346	382
50LNx2	ITEM	50/2 30FT/NB10	50/2 30FT/NB12	50/2 30FT/NF	50/2 30FT/NP1	50/2 30FT/NP3	50/2 30FT/NP6
	gr	306	306	342	334	343	364
50230NSFx1	ITEM	50/2 30FT/NSFB10	50/2 30FT/NSFB12	50/2 30FT/NSFF	50/2 30FT/NSFP1	50/2 30FT/NSFP3	50/2 30FT/NSFP6
	gr	292	292	334	318	331	352

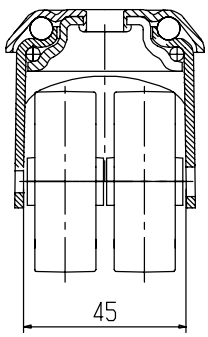

Supporti girevoli Serie 65/230 e supporti girevoli con freno 65/230FT
Swivel forks 65/230 and swivel forks with brake 65/230FT

Materiale: Lamiera ferro secondo standard EN 10130
Trattamanto superficiale Zincatura passivata UNI ISO 2081
Corona sfere superiore: n. 14 sfere 1/4" ingrassate
Corona sfere inferiore: n. 22 sfere 5/32" ingrassate
Material: Iron sheet EN 10130
Surface treatment passivated galvanisation subject to UNI ISO 2081
Upper ball crown N. 14 greased ball 1/4
Lower ball crown N. 22 greased ball 5/32

daN S Portata Statica conforme UNI EN 12527 * gr = Peso per 1 pezzo
daN S Static Load Capacity conform UNI EN 12527 * gr = Weight for a piece

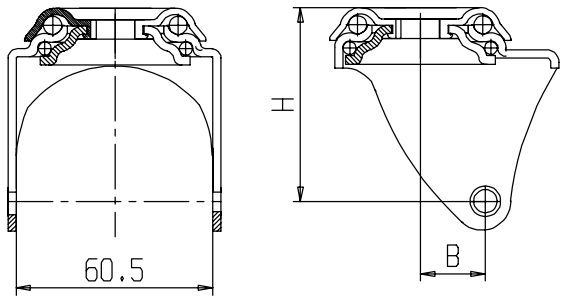

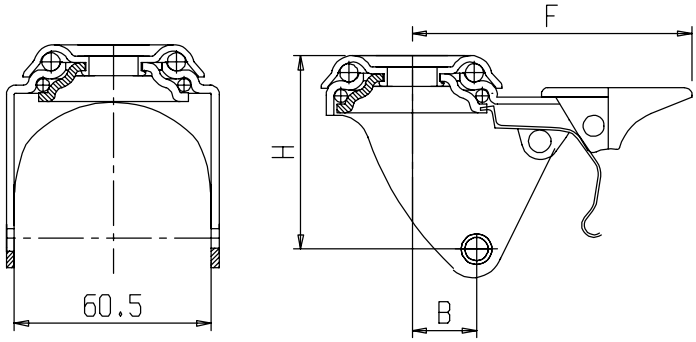

65/2 30

65/2 30FT

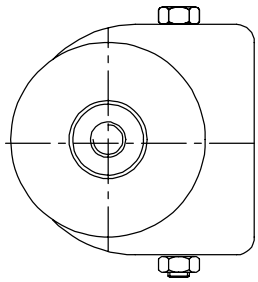

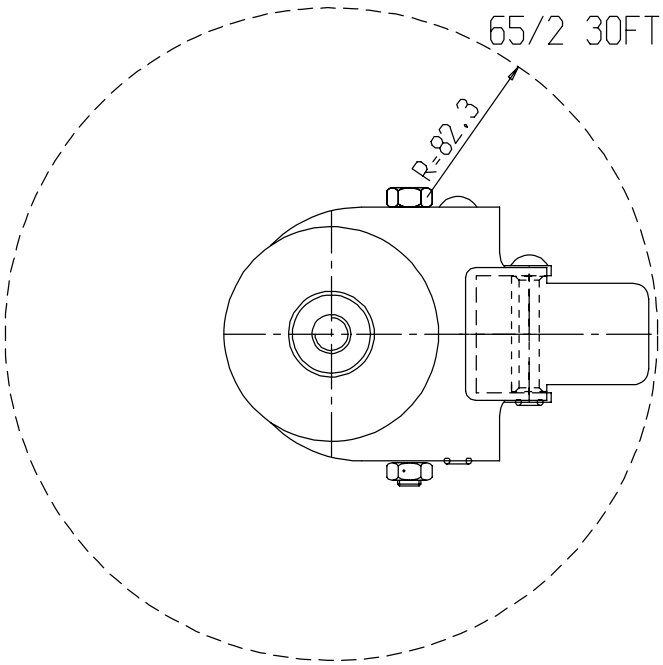

	B10	B12	F	P1 60x60	P3 77x67	P6 92x65
ITEM	65/2 30/B10	65/2 30/B12	65/2 30/F	65/2 30/P1	65/2 30/P3	65/2 30/P6
H	59.5	59.5	59.5	59.5	59.5	59.5
B	20	20	20	20	20	20
daN S	-	-	-	-	-	-
gr	-	-	-	-	-	-
ITEM	65/2 30FT/B10	65/2 30FT/B12	65/2 30FT/F	65/2 30FT/P1	65/2 30FT/P3	65/2 30FT/P6
H	60.1	60.1	60.1	60.1	60.1	60.1
F	87	87	87	87	87	87
daN S	-	-	-	-	-	-
gr	-	-	-	-	-	-

Complessivi girevoli Serie 65/2 30 e 65/2 30FT nelle varie tipologie di fissaggi, ruote assemblate

Swivel castors 65/2 30 and 65/2 30FT Series in the different types of fixings, assembled wheels

Requisiti dei complessivi assemblati con le varie ruote Requirements of the castors assembled with the different wheels		N	Nd
Portata Dinamica conforme UNI EN 12527 Dynamic Load capacity conform UNI EN 12527	daN D	100	100
Portata Statica conforme UNI EN 12527 Static Load capacity conform UNI EN 12527	daN S	150	150

Ruote disponibilii in Nylon Nero o Nylon Bianco
Wheels available in Black or White Nylon

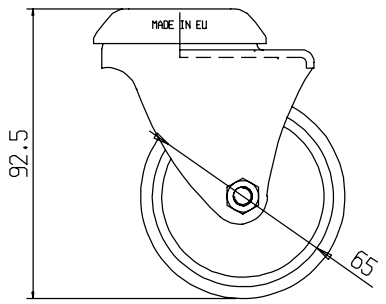

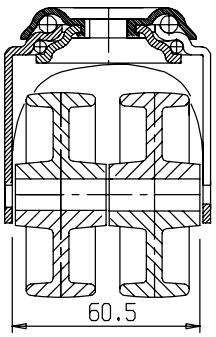

gr = Peso per 1 pezzo

gr = Weight for a piece

	B10	B12	B12	P1 60x60	P3 77x67	P6 92x65
	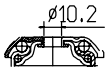	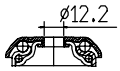	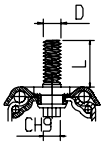	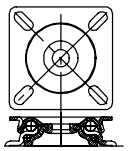	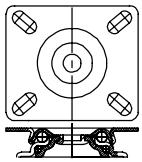	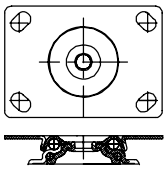
	ø10.2	ø12.2	D, L, CH9			
65/M/N x 2 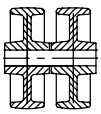	ITEM	65/2 30/NB10	65/2 30/NB12	65/2 30/NF	65/2 30/NP1	65/2 30/NP3	65/2 30/NP6
	gr	-	-	-	-	-	-
65/M/Nd x 2 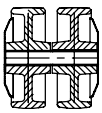	ITEM	65/2 30/NdB10	65/2 30/NdB12	65/2 30/NdF	65/2 30/NdP1	65/2 30/NdP3	65/2 30/NdP6
	gr	-	-	-	-	-	-

Requisiti dei complessivi assemblati con le varie ruote Requirements of the castors assembled with the different wheels		N	Nd
Portata Dinamica conforme UNI EN 12527 Dynamic Load capacity conform UNI EN 12527	daN D	100	100
Portata Statica conforme UNI EN 12527 Static Load capacity conform UNI EN 12527	daN S	150	150
Resistenza Passiva del dispositivo frenante conforme UNI EN 12527 Passive resistance of braking device in compliance with UNI EN 12527	daN FT		

Ruote disponibilii in Nylon Nero o Nylon Bianco
Wheels available in Black or White Nylon

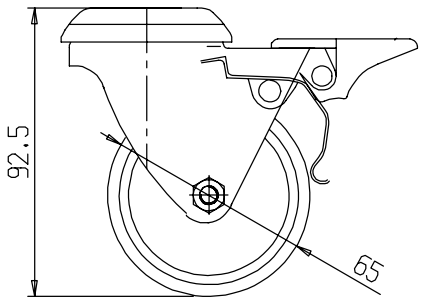

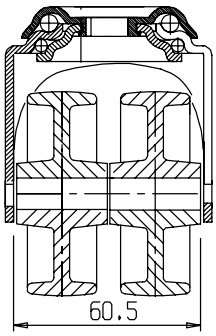

65/M/N x 2 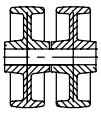	ITEM	65/2 30FT/NB10	65/2 30FT/NB12	65/2 30FT/NF	65/2 30FT/NP1	65/2 30FT/NP3	65/2 30FT/NP6
	gr	-	-	-	-	-	-
65/M/Nd x 2 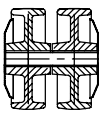	ITEM	65/2 30FT/NdB10	65/2 30FT/NdB12	65/2 30FT/NdF	65/2 30FT/NdP1	65/2 30FT/NdP3	65/2 30FT/NdP6
	gr	-	-	-	-	-	-

Requisiti Ruote Serie W nelle varie tipologie di: Diametri,Battistrada,Organi di Rotolamento
Wheels series W Requirements in the various types of :Diameters,Tyres,Rolling parts

Ruota tipo Wheel type		W	
Catteristiche del Battistrada Tyre characteristics		Gomma Antitraccia No- marking rubber	
Durezza del Battistrada conforme UNI EN 12527 Tyre hardness in compliance with UNI EN 12527	shore A	68	
Temperature di Utilizzo Raccomandate Recommended working temperatures	Max=	+40° C	
	Min=	0° C	
Catteristiche del Nucleo Wheel centre characteristics		Legno di Faggio Beech wood	
Catteristiche del Mozzo Hub characteristics		Foro Liscio Plain Bearing	Foro Liscio Plain Bearing

gr = Peso per 1 pezzo
gr = Weight for a piece

Portata Dinamica conforme UNI EN 12527 Dynamic load capacity conform UNI EN 12527 daN D	Resistenza al Rotolamento (FR) alla Portata Nominale Rolling resistance (FR)at rated capacity daN FR
Portata Statica conforme UNI EN 12527 Static load capacity conform UNI EN 12527 daN S	Resistenza al Superamento Ostacolo (FO) alla Portata Nominale H ostacolo=1% ø della Ruota Min 0.5 mm Obstacle overcoming resistance (FO) at rated capacity Obstacle H=1% of wheel, min.0.5 mm daN FO

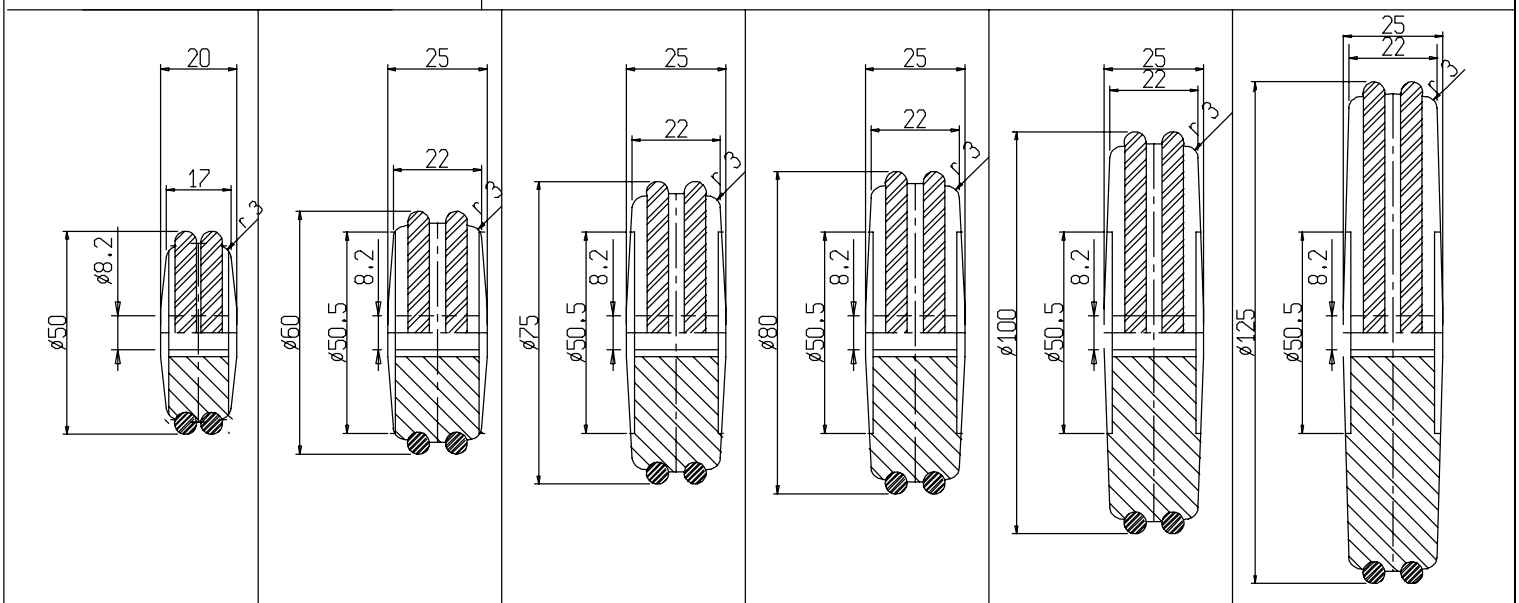

ITEM	50L/W	ITEM	60M/W	ITEM	75M/W	ITEM	80M/W	ITEM	100M/W	ITEM	125M/W
daN D		daN D		daN D		daN D		daN D		daN D	
daN S		daN S		daN S		daN S		daN S		daN S	
daN FR		daN FR		daN FR		daN FR		daN FR		daN FR	
daN FO		daN FO		daN FO		daN FO		daN FO		daN FO	
gr	25	gr	48	gr	72	gr	79	gr	131	gr	205

Gamma di Fissaggi Standard per Supporti Serie W
Range of standard fixings for forks of the W series

A Foro Passante ø10.2 per Vite di Fissaggio Imbus M10x25 (*)

With bolt hole of ø 10.2 for fixing screw IMBUS M10x25

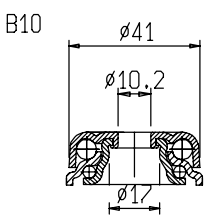

* Lunghezza della Vite Inseribile con Ruota Assemblata

* Length of screw that can be inserted with assembled wheel

A Perno Filettato Rivettato dimensioni a Tabella da Specificare sempre all' Ordine

With riveted thread stem, dimensions as per table to be specified when placing order

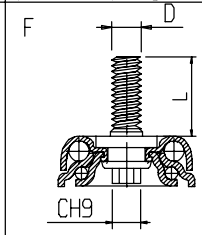

D	M10	M12
L	15-25	25

Fissaggio a Piastra Integrale PI 60X60

Integral plate fixing PI 60x60

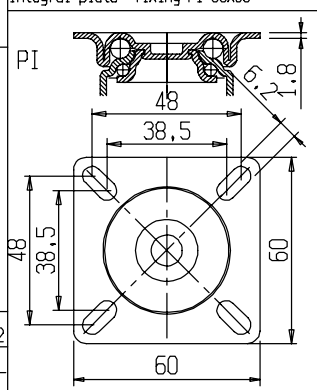

Diverse Asolature sono Eseguibili, Iscritte nel Perimetro Esterno

Possibility of various slots made in the external perimeter

Fissaggio a Piastra Integrale PI 68.5x48

Integral plate fixing PI 68.5x48

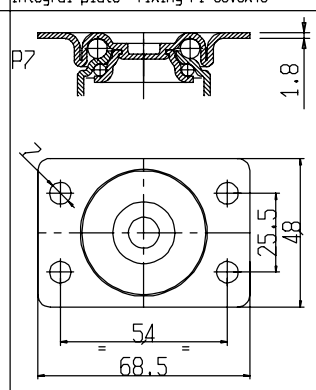

Diverse Asolature sono Eseguibili, Iscritte nel Perimetro Esterno

Possibility of various slots made in the external perimeter

Fissaggio a Piastra Integrale P3 77x67

Integral plate fixing P3 77x67

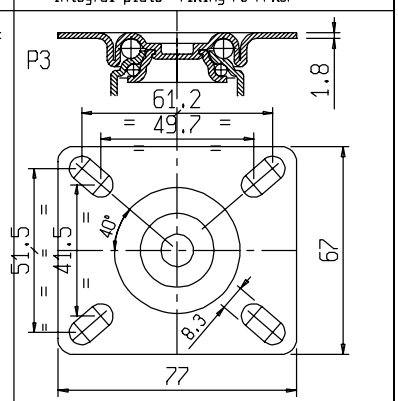

Diverse Asolature sono Eseguibili, Iscritte nel Perimetro Esterno

Possibility of various slots made in the external perimeter

Supporti girevoli Cromati e Cataforesi Nera Swivel forks with chrome-plating and black cataphoresis treatment	Complessivi Assemblati a Ruote Castors assembled with the wheels	50MLW 50MLW

Trattamento superficiale Supporti: Cromatura Brillante UNI ISO 208
Cataforesi Nera UNI ISO 208

Forks surface treatment : Shiny chrome-plating UNI ISO 208
Black cataphoresis UNI ISO 208

50W

Requisiti dei Complessivi Assemblati con Ruote — Requirements of the castors assembled with the wheels — 50W

Portata Dinamica conforme UNI EN 12527 — Dynamic load capacity conform UNI EN 12527

Portata Statica conforme UNI EN 12527 * — Static load capacity conform UNI EN 12527 *

* La portata statica indicata per i soli supporti corrisponde a 1.5 portata dinamica verificata secondo UNI 12527 montando una ruota in Nylon

* The static load capacity mentioned for the only forks correspond to 1.5 of dynamic load capacity checked according to UNI 12527 assembling with a nylon wheel

daN D	35
daN S	52.5

gr = Peso per 1 pezzo — gr = Weight for a piece

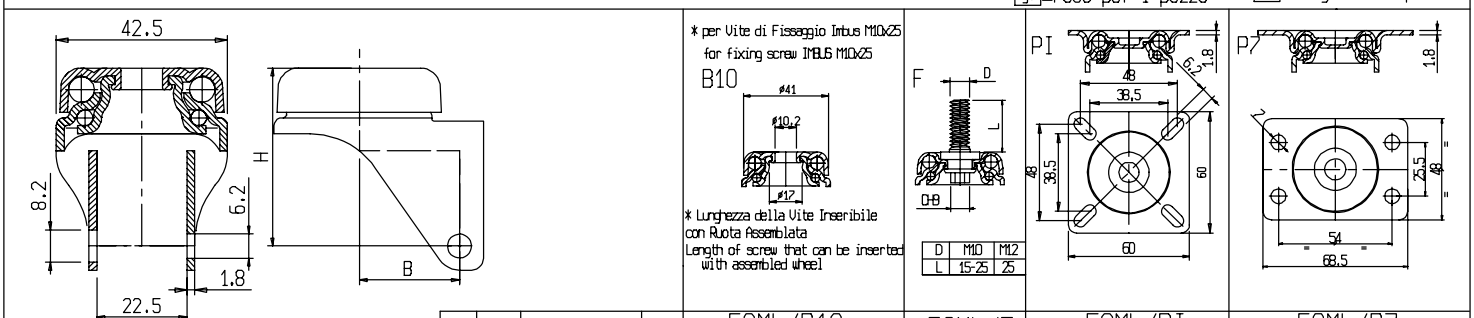

CROMATO
CHROME PLATED

ITEM	8062	ASSE VITE (624/RID)+ DADO SCREW AXLE (624/RID)+NUT
	-	

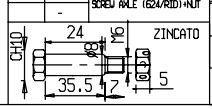

ITEM	50ML/B10	50ML/F	50ML/PI	50ML/P7
H	46	46	46	46
B	26	26	26	26
gr	122	147	150	147

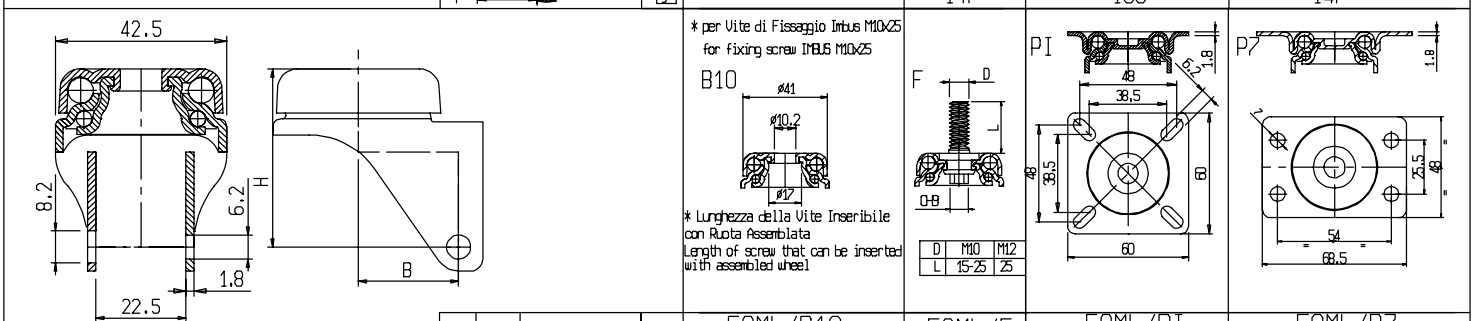

CATAFORESI NERA
BLACK CATAFORESI

ITEM	8062	ASSE VITE (624/RID)+ DADO SCREW AXLE (624/RID)+NUT
	-	

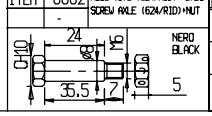

ITEM	50ML/B10	50ML/F	50ML/PI	50ML/P7
H	46	46	46	46
B	26	26	26	26
gr	122	147	150	147

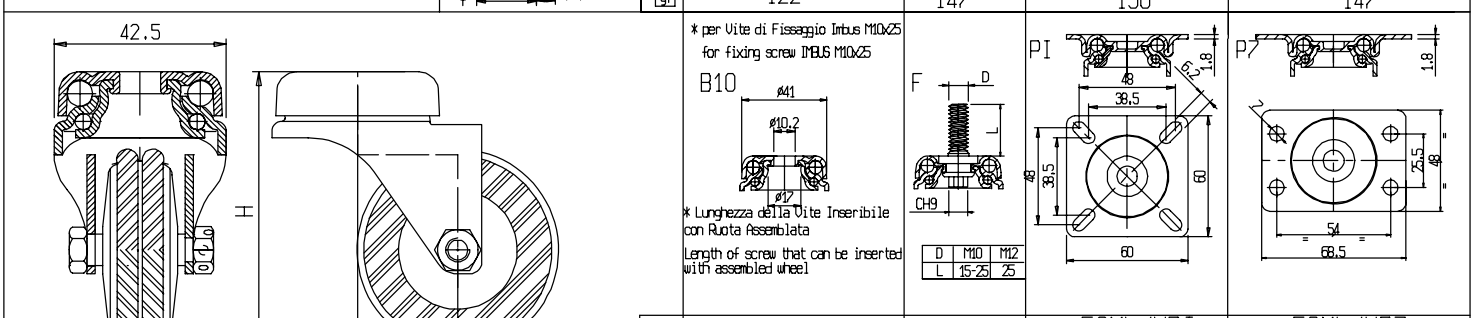

CROMATO
CHROME PLATED

ITEM	50ML/WB10	50ML/WF	50ML/WPI	50ML/WP7
H	71	71	71	71
B	26	26	26	26
gr	163	188	201	198

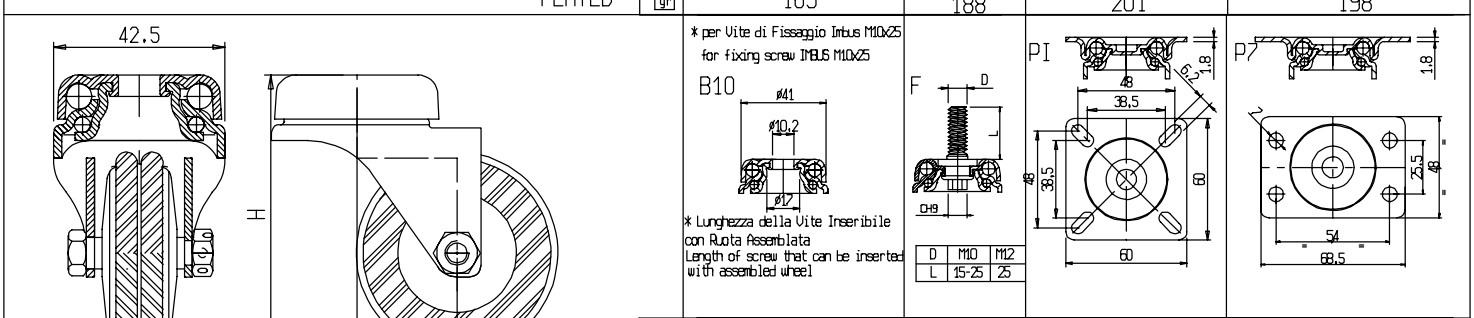

CATAFORESI NERA
BLACK CATAFORESI

ITEM	50ML/WB10	50ML/WF	50ML/WPI	50ML/WP7
H	71	71	71	71
B	26	26	26	26
gr	163	188	201	198

* La portata statica indicata per i soli supporti corrisponde a 1.5 portata dinamica verificata secondo UNI 12527 montando una ruota in Nylon

* The static load capacity mentioned for the only forks correspond to 1.5 of dynamic load capacity checked according to UNI 12527 assembling with a nylon wheel

Supporti girevoli con freno Cromati e Cataforesi Nera
Swivel forks with brake with chrome-plating and black cataphoresis treatment

Complessivi Assemblati a Ruote 50MLW
Castors assembled with the wheels 50MLW

Trattamento superficiale Supporti: Cromatura Brillante UNI ISO 208
Cataforesi Nera UNI ISO 208

Forks surface treatment : Shiny chrome-plating UNI ISO 208
Black cataphoresis UNI ISO 208

50WFT

Requisiti dei Complessivi Assemblati con Ruote 50MLW Requirements of the castors assembled with the wheels

Portata Dinamica conforme UNI EN 12527 Dynamic load capacity conform UNI EN 12527

Portata Statica conforme UNI EN 12527 * Static load capacity conform UNI EN 12527 *

Resistenza Pssiva del Dispositivo Frenante Conforme UNI EN 12527 Passive resistance of braking device in compliance with UNI EN 12527

* La portata statica indicata per i soli supporti corrisponde a 1.5 portata dinamica verificata secondo UNI 12527 montando una ruota in Nylon

* The static load capacity mentioned for the only forks correspond to 1.5 of dynamic load capacity checked according to UNI 12527 assembling with a nylon wheel

	50MLW
daN D	35
daN S	52.5
daN FT	

gr=Peso per 1 pezzo gr=Weight for a piece

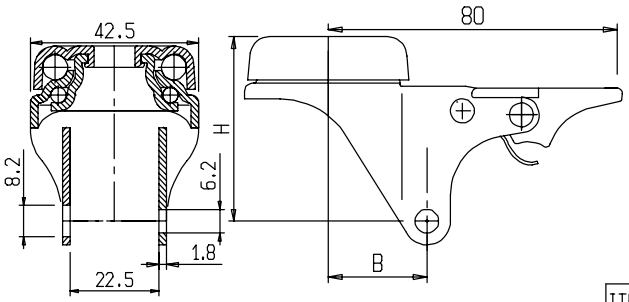

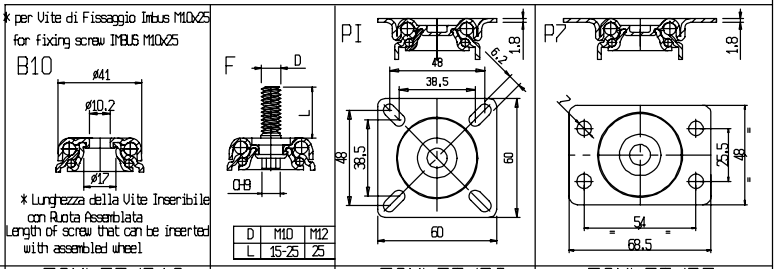

ITEM	50MLFT/B10	50MLFT/F	50MLFT/PI	50MLFT/P7
H	46	46	46	46
B	26	26	26	26
gr	162	187	190	187

ITEM	8062	ASSE VITE (624/RID)+DADO SCREW AXLE (624/RID)+NUT
	-	

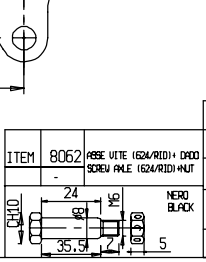

ZINCATO

CROMATO
CHROME PLATED

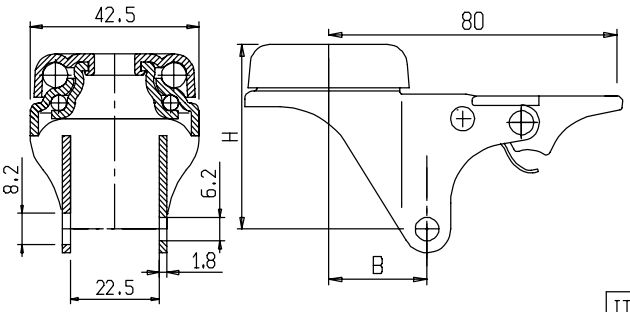

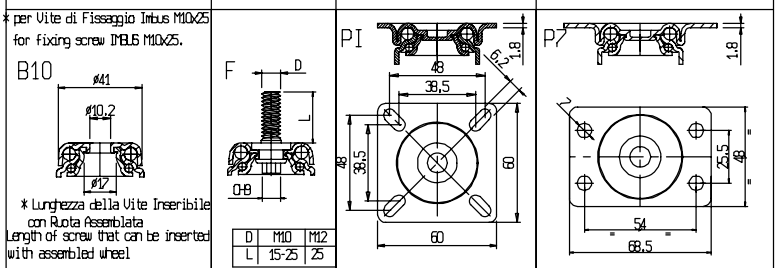

ITEM	50MLFT/B10	50MLFT/F	50MLFT/PI	50MLFT/P7
H	46	46	46	46
B	26	26	26	26
gr	162	187	190	187

ITEM	8062	ASSE VITE (624/RID)+DADO SCREW AXLE (624/RID)+NUT
	-	

NERO BLACK

CATAFORESI NERA
BLACK CATAFORESI

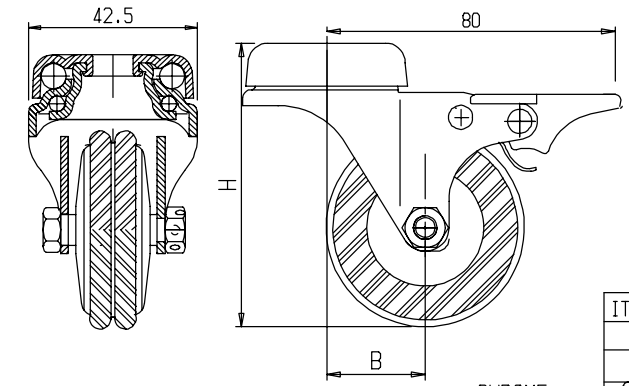

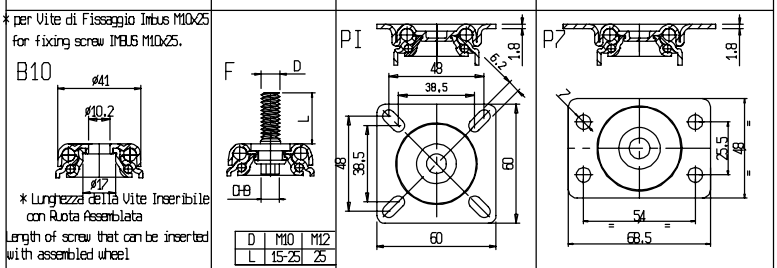

ITEM	50MLFT/WB10	50MLFT/WF	50MLFT/WPI	50MLFT/WP7
H	71	71	71	71
B	26	26	26	26
gr	188	213	226	223

CROMATO

CHROME PLATED

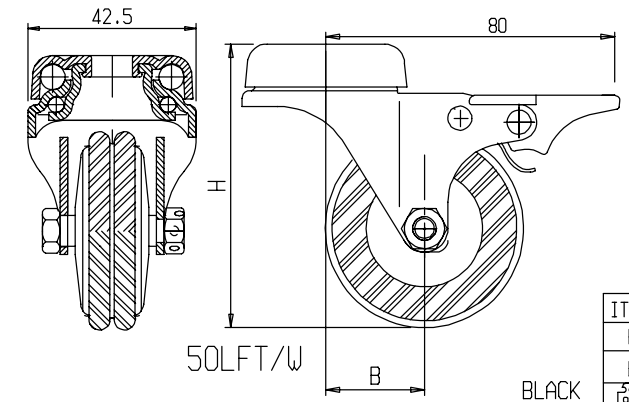

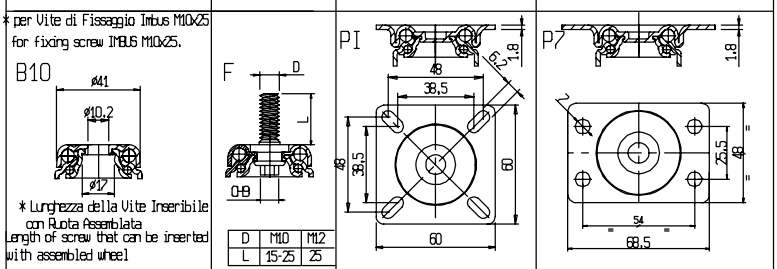

ITEM	50MLFT/WB10	50MLFT/WF	50MLFT/WPI	50MLFT/WP7
H	71	71	71	71
B	26	26	26	26
gr	188	213	226	223

BLACK CATAFORESI

CATAFORESI NERA

Supporti girevoli Cromati e Cataforesi Nera

Swivel forks with chrome-plating and black cataphoresis treatment

Complessivi Assemblati a Ruote 50/2W

Castors assembled with the wheels 50/2W

Trattamento superficiale Supporti: Cromatura Brillante UNI ISO 208
Cataforesi Nera UNI ISO 208

Forks surface treatment : Shiny chrome-plating UNI ISO 208
Black cataphoresis UNI ISO 208

50/2W

Requisiti dei Complessivi Assemblati con Ruote 50/2W Requirements of the castors assembled with the wheels

Portata Dinamica conforme UNI EN 12527 — Dynamic load capacity conform UNI EN 12527

Portata Statica conforme UNI EN 12527 * — Static load capacity conform UNI EN 12527 *

* La portata statica indicata per i soli supporti corrisponde a 1.5 portata dinamica verificata secondo UNI 12527 montando una ruota in Nylon

* The static load capacity mentioned for the only forks correspond to 1.5 of dynamic load capacity checked according to UNI 12527 assembling with a nylon wheel

50/2W	
daN D	70
daN S	105

gr = Peso per 1 pezzo — gr = Weight for a piece

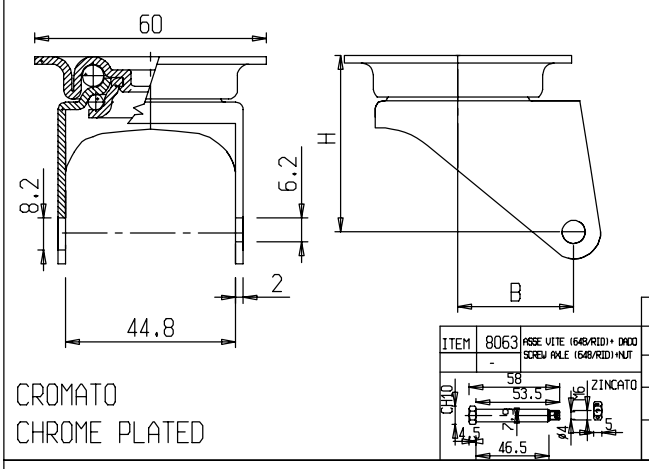

CROMATO
CHROME PLATED

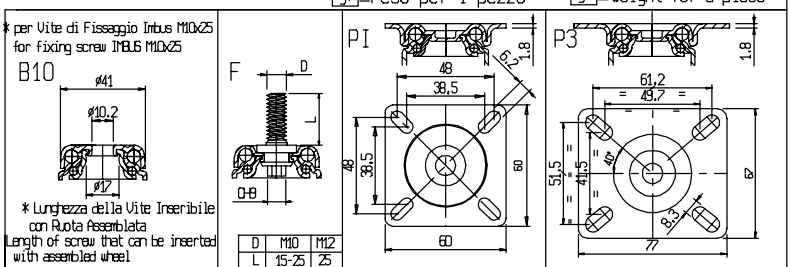

ITEM	50 2/B10	50 2/F	50 2/PI	50 2/P3
H	47	47	47	47
B	30	30	30	30
gr	147	172	190	205

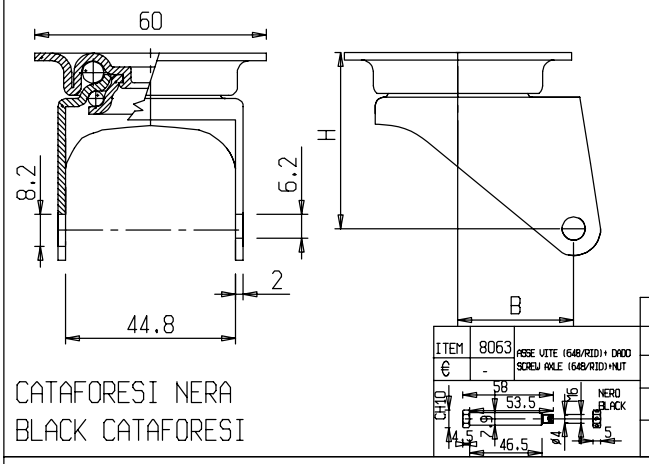

CATAFORESI NERA
BLACK CATAFORESI

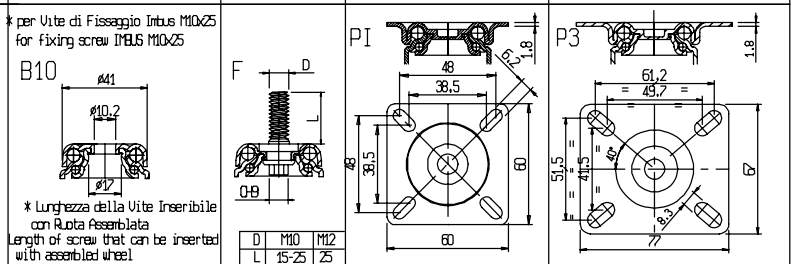

ITEM	50 2/B10	50 2/F	50 2/PI	50 2/P3
H	47	47	47	47
B	30	30	30	30
gr	147	172	190	205

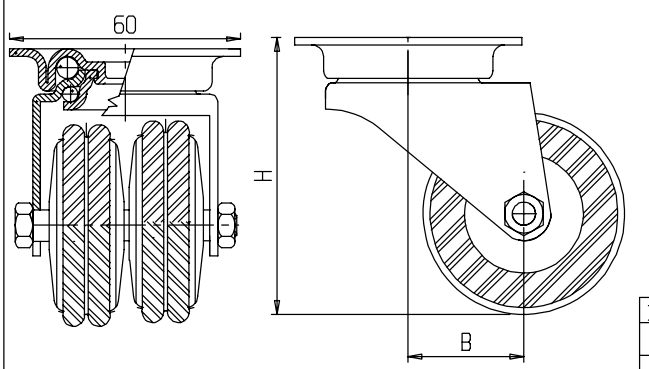

CROMATO
CHROME PLATED

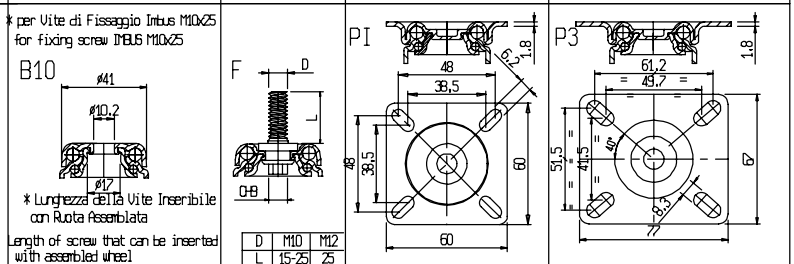

ITEM	50/2/WB10	50/2/WF	50/2/WPI	50/2/WP3
H	72	72	72	72
B	30	30	30	30
gr	219	244	257	272

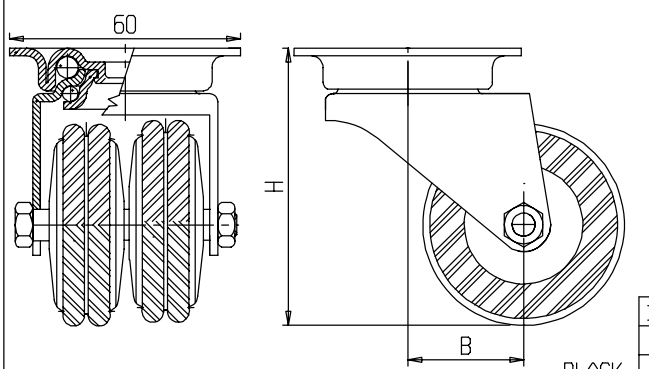

CATAFORESI NERA
BLACK CATAFORESI

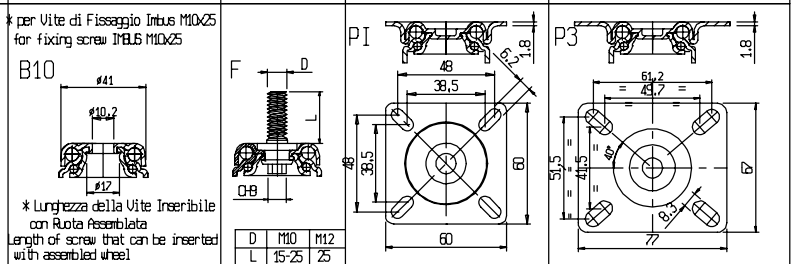

ITEM	50/2/WB10	50/2/WF	50/2/WPI	50/2/WP3
H	72	72	72	72
B	30	30	30	30
gr	219	244	257	272

Supporti girevoli con freno Cromati e Cataforesi Nera

Swivel foks with brake with chrome-plating and black cataphoresis treatment

Complessivi Assemblati a Ruote 50/2W

Castors assembled with the wheels 50/2W

Trattamento superficiale Supporti: Cromatura Brillante UNI ISO 208
Cataforesi Nera UNI ISO 208

Forks surface treatment : Shiny chrome-plating UNI ISO 208
Black cataphoresis UNI ISO 208

50/2WFT

Requisiti dei Complessivi Assemblati con Ruote 50/2W Requirements of the castors assembled with wheels 50MLW

Portata Dinamica conforme UNI EN 12527 Dynamic load capacity conform UNI EN 12527

Portata Statica conforme UNI EN 12527 * Static load capacity conform UNI EN 12527 *

* La portata statica indicata per i soli supporti corrisponde a 1.5 portata dinamica verificata secondo UNI 12527 montando una ruota in Nylon

* The static load capacity mentioned for the only forks correspond to 1.5 of dynamic load capacity checked according to UNI 12527 assembling with a nylon wheel

daN D	70
daN S	105
daN FT	

Resistenza Pssiva del Dispositivo Frenante Conforme UNI EN 12527 Passive resistance of braking device in compliance with UNI EN 12527

gr=Peso per 1 pezzo gr=Weight for a piece

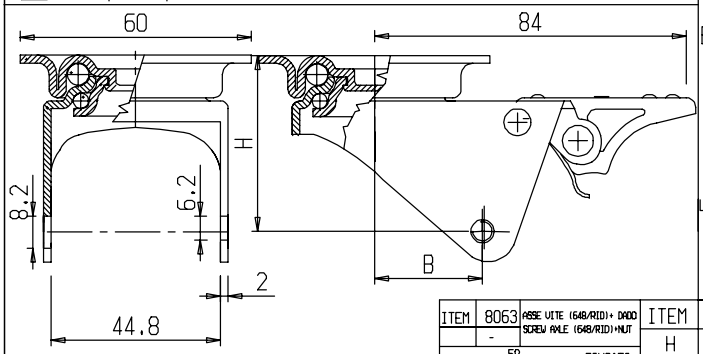

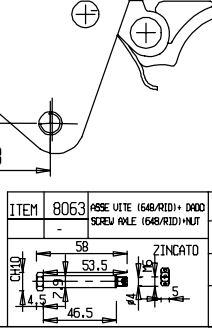

CROMATO
CHROME PLATED

* per Vite di Fissaggio Imbus M10x25
for fixing screw IMBUS M10x25

B10

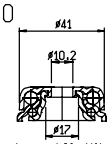

* Lunghezza della Vite Inseribile con Ruota Assemblata
Length of screw that can be inserted with assembled wheel

F

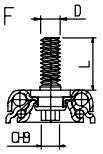

D	M10	M12
L	15-25	25

PI

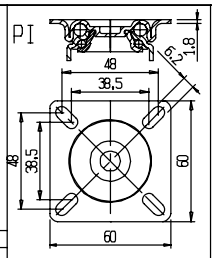

P3

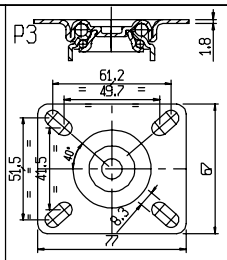

ITEM	50 2FT/B10	50 2FT/F	50 2FT/PI	50 2FT/P3
H	47	47	47	47
B	30	30	30	30
gr	198	218	239	255

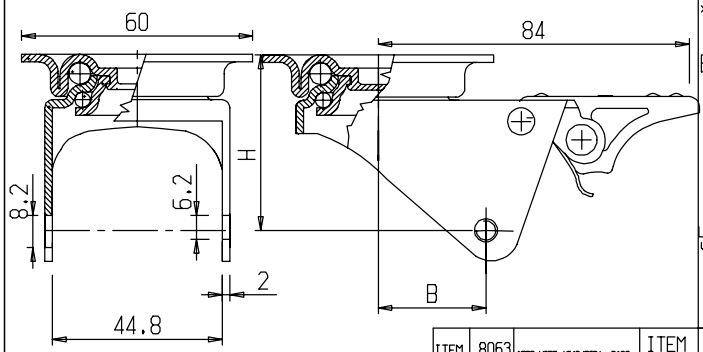

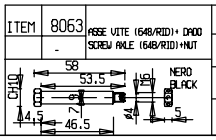

CATAFORESI NERA
BLACK CATAFORESI

* per Vite di Fissaggio Imbus M10x25
for fixing screw IMBUS M10x25

B10

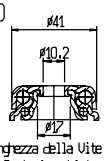

* Lunghezza della Vite Inseribile con Ruota Assemblata
Length of screw that can be inserted with assembled wheel

F

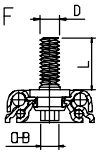

D	M10	M12
L	15-25	25

PI

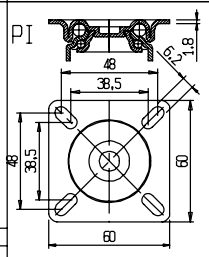

P3

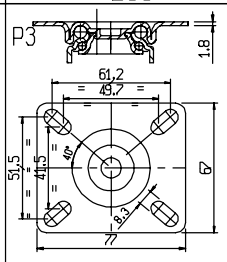

ITEM	50 2FT/B10	50 2FT/F	50 2FT/PI	50 2FT/P3
H	47	47	47	47
B	30	30	30	30
gr	198	218	239	255

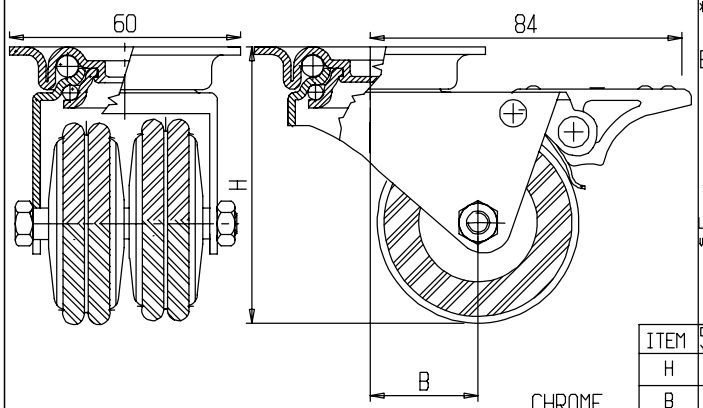

CROMATO
CHROME PLATED

* per Vite di Fissaggio Imbus M10x25
for fixing screw IMBUS M10x25

B10

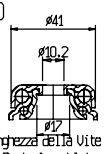

* Lunghezza della Vite Inseribile con Ruota Assemblata
Length of screw that can be inserted with assembled wheel

F

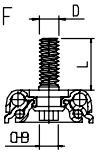

D	M10	M12
L	15-25	25

PI

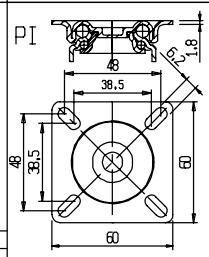

P3

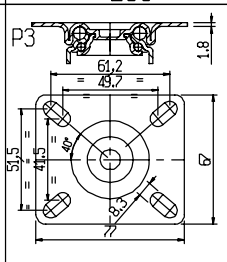

ITEM	50/2FT/WB10	50/2FT/WF	50/2FT/WPI	50/2FT/WP3
H	72	72	72	72
B	30	30	30	30
gr	262	282	300	316

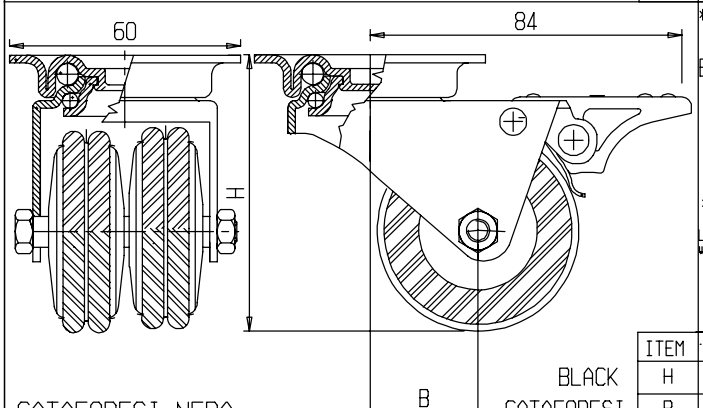

CATAFORESI NERA
BLACK CATAFORESI

* per Vite di Fissaggio Imbus M10x25
for fixing screw IMBUS M10x25

B10

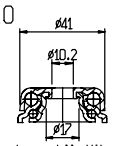

* Lunghezza della Vite Inseribile con Ruota Assemblata
Length of screw that can be inserted with assembled wheel

F

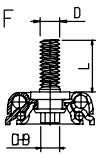

D	M10	M12
L	15-25	25

PI

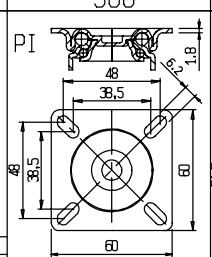

P3

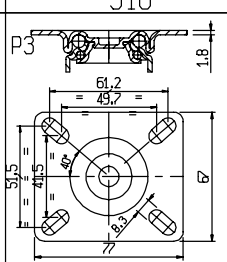

ITEM	50/2FT/WB10	50/2FT/WF	50/2FT/WPI	50/2FT/WP3
H	72	72	72	72
B	30	30	30	30
gr	262	282	300	316

Supporti girevoli Cromati e Cataforesi Nera
Swivel forks with chrome-plating and black cataphoresis treatment

Complessivi Assemblati a Ruote 60W
Castors assembled with the wheels 60W

Trattamento superficiale Supporti: Cromatura Brillante UNI ISO 208
Cataforesi Nera UNI ISO 208

Forks surface treatment: Shiny chrome-plating UNI ISO 208
Black cataphoresis UNI ISO 208 60W

Requisiti dei Complessivi Assemblati con Ruote 60W Requirements of the castors assembled with wheels 60W

Portata Dinamica conforme UNI EN 12527 — Dynamic load capacity conform UNI EN 12527

Portata Statica conforme UNI EN 12527* — Static load capacity conform UNI EN 12527 *

* La portata statica indicata per i soli supporti corrisponde a 1.5 portata dinamica verificata secondo UNI 12527 montando una ruota in Nylon

* The static load capacity mentioned for the only forks correspond to 1.5 of dynamic load capacity checked according to UNI 12527 assembling with a nylon wheel

daN D	50
daN S	75

gr=Peso per 1 pezzo — gr=Weight for a piece

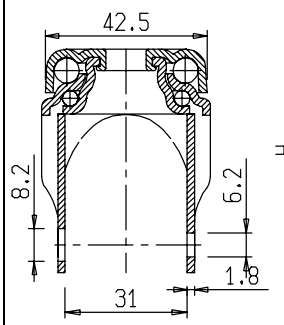

CROMATO
CHROME PLATED

* per Vite di Fissaggio Imbus M10x25
for fixing screw IMBUS M10x25

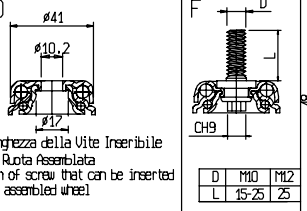

* Lunghezza della Vite Inseribile con Ruota Assemblata
Length of screw that can be inserted with assembled wheel

D	M10	M12
L	15-25	25

ITEM	60M/B10	60M/F	60M/PI	60M/P7
H	52.5	52.5	52.5	52.5
B	21	21	21	21
gr	136	161	163	160

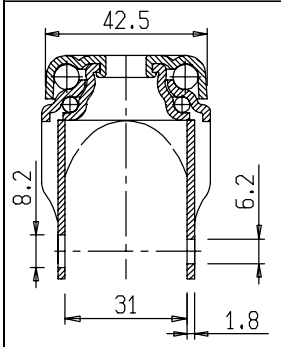

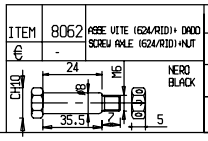

CATAFORESI NERA
BLACK CATAFORESI

* per Vite di Fissaggio Imbus M10x25
for fixing screw IMBUS M10x25

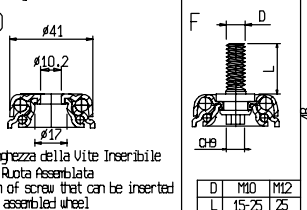

* Lunghezza della Vite Inseribile con Ruota Assemblata
Length of screw that can be inserted with assembled wheel

D	M10	M12
L	15-25	25

ITEM	60M/B10	60M/F	60M/PI	60M/P7
H	52.5	52.5	52.5	52.5
B	21	21	21	21
gr	136	161	163	160

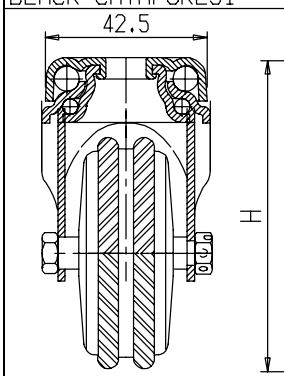

CROMATO
CHROME PLATED

* per Vite di Fissaggio Imbus M10x25
for fixing screw IMBUS M10x25

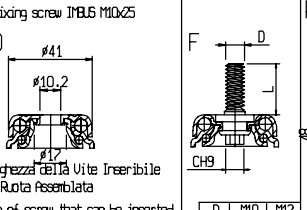

* Lunghezza della Vite Inseribile con Ruota Assemblata
Length of screw that can be inserted with assembled wheel

D	M10	M12
L	15-25	25

ITEM	60M/WB10	60M/WF	60M/WPI	60M/WP7
H	82.5	82.5	82.5	82.5
B	21	21	21	21
gr	202	227	240	237

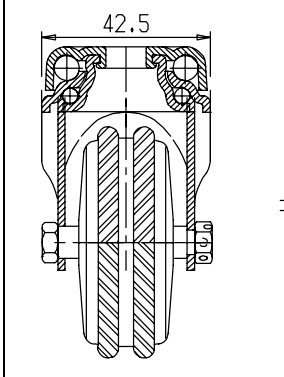

CATAFORESI NERA

* per Vite di Fissaggio Imbus M10x25
for fixing screw IMBUS M10x25

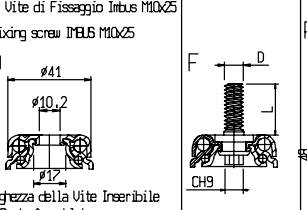

* Lunghezza della Vite Inseribile con Ruota Assemblata
Length of screw that can be inserted with assembled wheel

D	M10	M12
L	15-25	25

ITEM	60M/WB10	60M/WF	60M/WPI	60M/WP7
H	82.5	82.5	82.5	82.5
B	21	21	21	21
gr	202	227	240	237

Supporti girevoli con freno Cromati e Cataforesi Nera

Swivel foks with brake with chrome-plating and black cataphoresis treatment

Complessivi Assemblati a Ruote 60MW

Castors assembled with the wheels 60MW

60WFT

Trattamento superficiale Supporti: Cromatura Brillante UNI ISO 208
Cataforesi Nera UNI ISO 208

Forks surface treatment : Shiny chrome-plating UNI ISO 208
Black cataphoresis UNI ISO 208

Requisiti dei Complessivi Assemblati con Ruote 60MW Requirements of the castors assembled with wheels 60MW

Portata Dinamica conforme UNI EN 12527 Dynamic load capacity conform UNI EN 12527

Portata Statica conforme UNI EN 12527 * Static load capacity conform UNI EN 12527 *

Resistenza Pssiva del Dispositivo Frenante Conforme UNI EN 12527 Passive resistance of braking device in compliance with UNI EN 12527

* La portata statica indicata per i soli supporti corrisponde a 1.5 portata dinamica verificata secondo UNI 12527 montando una ruota in Nylon

* The static load capacity mentioned for the only forks correspond to 1.5 of dynamic load capacity checked according to UNI 12527 assembling with a nylon wheel

daN D	50
daN S	75
daN FT	

gr=Peso per 1 pezzo gr=Weight for a piece

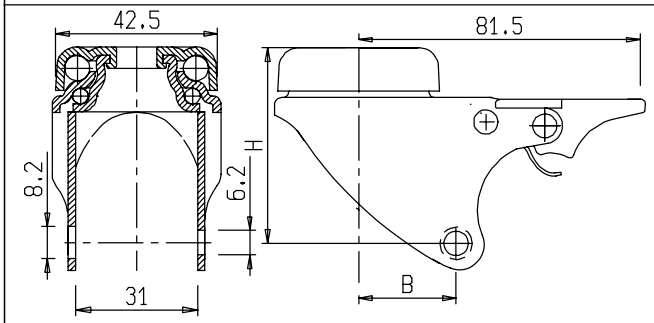

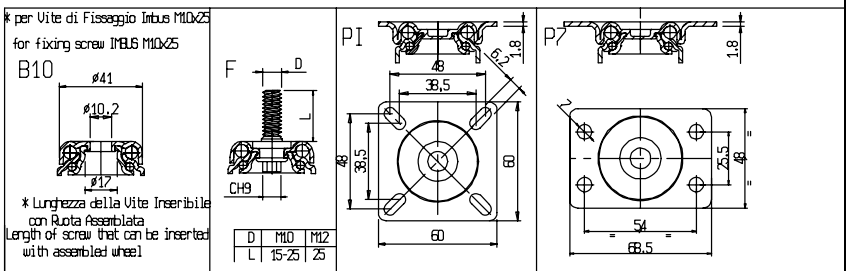

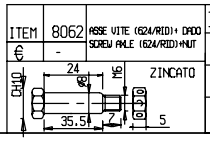

CROMATO
CHROME PLATED

ITEM	60MFT/B10	60MFT/F	60MFT/PI	60MFT/P7
H	52.5	52.5	52.5	52.5
B	21	21	21	21
gr	186	211	209	206

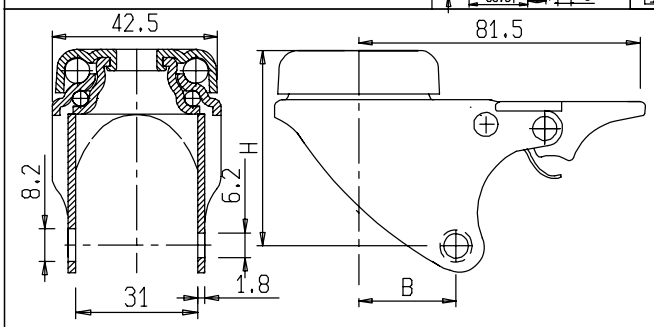

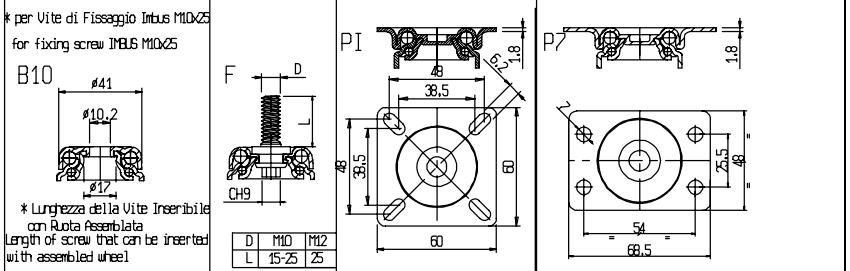

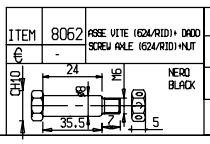

CATAFORESI NERA
BLACK CATAFORESI

ITEM	60MFT/B10	60MFT/F	60MFT/PI	60MFT/P7
H	52.5	52.5	52.5	52.5
B	21	21	21	21
gr	186	211	209	206

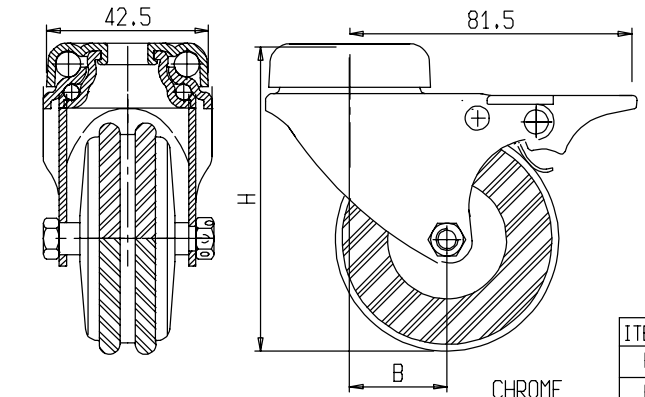

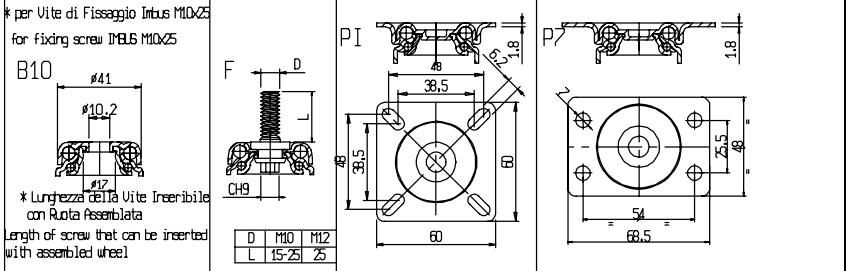

CROMATO

CHROME PLATED

ITEM	60MFT/WB10	60MFT/WF	60MFT/WPI	60MFT/WP7
H	82.5	82.5	82.5	82.5
B	21	21	21	21
gr	252	277	290	287

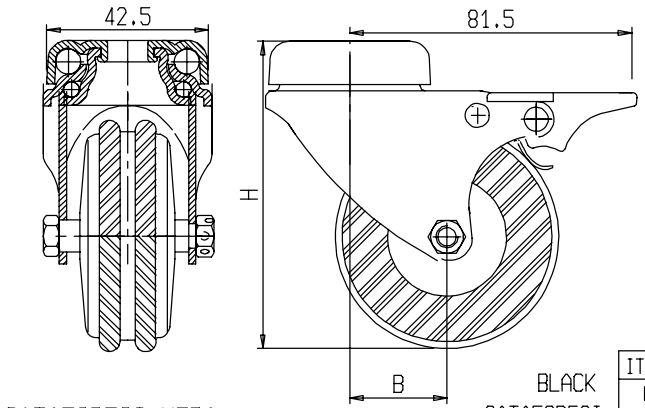

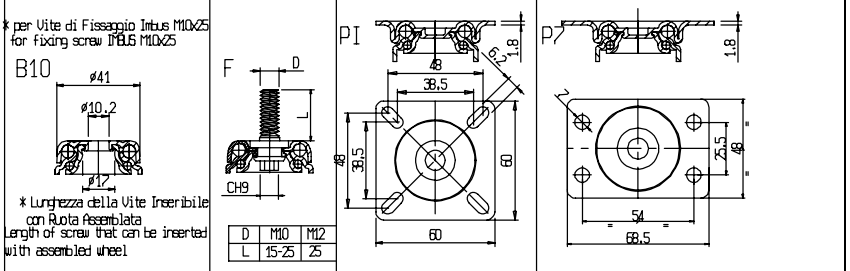

CATAFORESI NERA

BLACK CATAFORESI

ITEM	60MFT/WB10	60MFT/WF	60MFT/WPI	60MFT/WP7
H	82.5	82.5	82.5	82.5
B	21	21	21	21
gr	252	277	290	287

Supporti girevoli Cromati e Cataforesi Nera

Swivel forks with chrome-plating and black cataphoresis treatment

Complessivi Assemblati a Ruote 75W

Castors assembled with the wheels 75W

Trattamento superficiale Supporti: Cromatura Brillante UNI ISO 208
Cataforesi Nera UNI ISO 208

Forks surface treatment: Shiny chrome-plating UNI ISO 208
Black cataphoresis UNI ISO 208 75W

Requisiti dei Complessivi Assemblati con Ruote 75MW Requirements of the castors assembled with wheels 75MW

Portata Dinamica conforme UNI EN 12527 — Dynamic load capacity conform UNI EN 12527

Portata Statica conforme UNI EN 12527 * — Static load capacity conform UNI EN 12527 *

* La portata statica indicata per i soli supporti corrisponde a 1.5 portata dinamica verificata secondo UNI 12527 montando una ruota in Nylon

* The static load capacity mentioned for the only forks correspond to 1.5 of dynamic load capacity checked according to UNI 12527 assembling with a nylon wheel

	daN
D	40
S	60

gr=Peso per 1 pezzo — gr=Weight for a piece

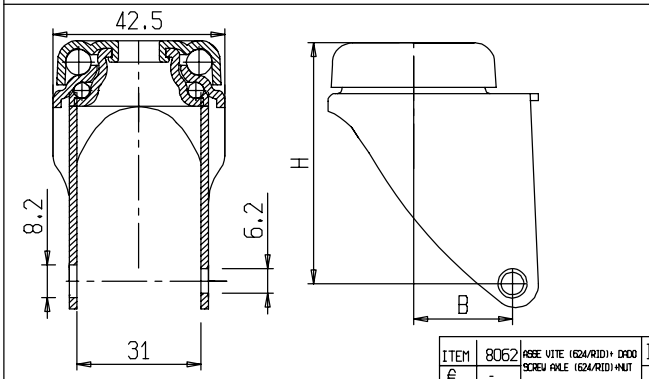

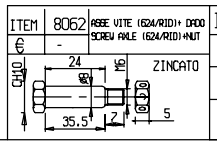

CROMATO
CHROME PLATED

* per Vite di Fissaggio Imbus M10x25
for fixing screw IMBUS M10x25

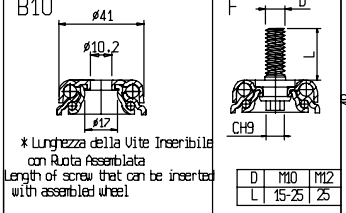

* Lunghezza della Vite Inseribile con Ruota Assemblata
Length of screw that can be inserted with assembled wheel

D	M10	M12
L	15-25	25

ITEM	75M/B10	75M/F	75M/PI	75M/P3
H	63.5	63.5	63.5	63.5
B	30	30	30	30
gr	162	187	200	216

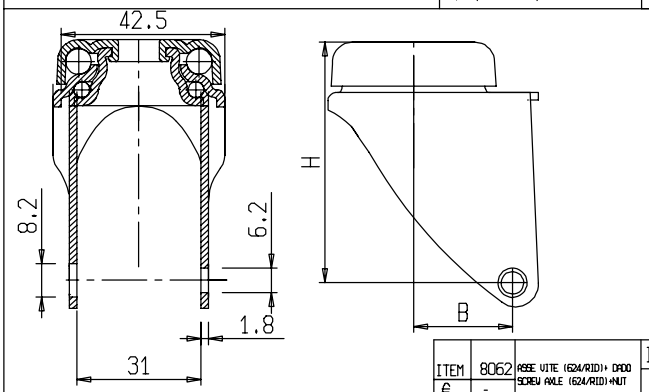

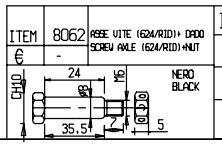

CATAFORESI NERA
BLACK CATAFORESI

* per Vite di Fissaggio Imbus M10x25
for fixing screw IMBUS M10x25

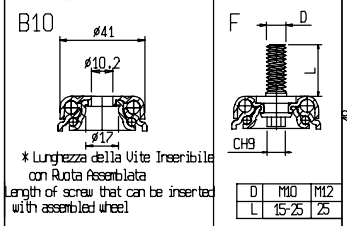

* Lunghezza della Vite Inseribile con Ruota Assemblata
Length of screw that can be inserted with assembled wheel

D	M10	M12
L	15-25	25

ITEM	75M/B10	75M/F	75M/PI	75M/P3
H	63.5	63.5	63.5	63.5
B	30	30	30	30
gr	162	187	200	216

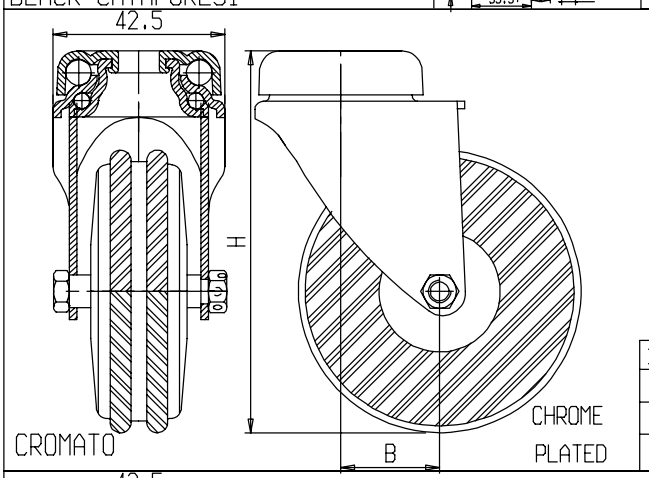

CROMATO
CHROME PLATED

* per Vite di Fissaggio Imbus M10x25
for fixing screw IMBUS M10x25

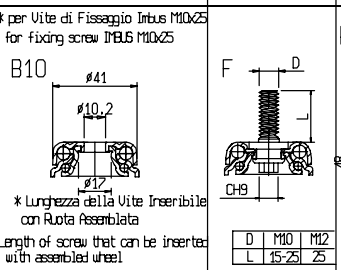

* Lunghezza della Vite Inseribile con Ruota Assemblata
Length of screw that can be inserted with assembled wheel

D	M10	M12
L	15-25	25

ITEM	75M/WB10	75M/WF	75M/WPI	75M/WP3
H	101	101	101	101
B	30	30	30	30
gr	252	277	290	306

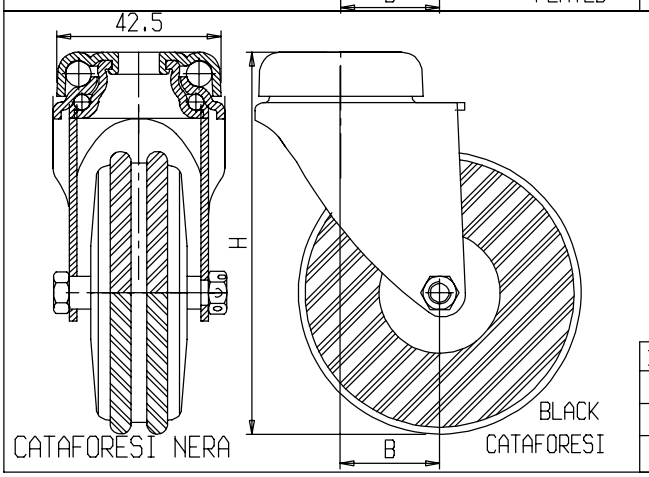

CATAFORESI NERA
BLACK CATAFORESI

* per Vite di Fissaggio Imbus M10x25
for fixing screw IMBUS M10x25

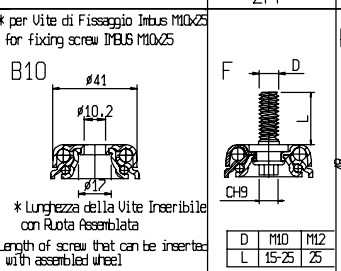

* Lunghezza della Vite Inseribile con Ruota Assemblata
Length of screw that can be inserted with assembled wheel

D	M10	M12
L	15-25	25

ITEM	75M/WB10	75M/WF	75M/WPI	75M/WP3
H	101	101	101	101
B	30	30	30	30
gr	252	277	290	306

Supporti girevoli con freno Cromati e Cataforesi Nera

Swivel foks with brake with chrome-plating and black cataphoresis treatment

Complessivi Assemblati a Ruote 75MW

Castors assembled with the wheels 75MW

Trattamento superficiale Supporti: Cromatura Brillante UNI ISO 208
Cataforesi Nera UNI ISO 208

Forks surface treatment : Shiny chrome-plating UNI ISO 208
Black cataphoresis UNI ISO 208

75WFT

Requisiti dei Complessivi Assemblati con Ruote 75MW Requirements of the castors assembled with wheels 75MW

75MW

Portata Dinamica conforme UNI EN 12527 Dynamic load capacity conform UNI EN 12527

Portata Statica conforme UNI EN 12527 * Static load capacity conform UNI EN 12527 *

Resistenza Pssiva del Dispositivo Frenante Conforme UNI EN 12527 Passive resistance of braking device in compliance with UNI EN 12527

* La portata statica indicata per i soli supporti corrisponde a 1.5 portata dinamica verificata secondo UNI 12527 montando una ruota in Nylon

* The static load capacity mentioned for the only forks correspond to 1.5 of dynamic load capacity checked according to UNI 12527 assembling with a nylon wheel

daN D	40
daN S	60
daN FT	

gr=Peso per 1 pezzo gr=Weight for a piece

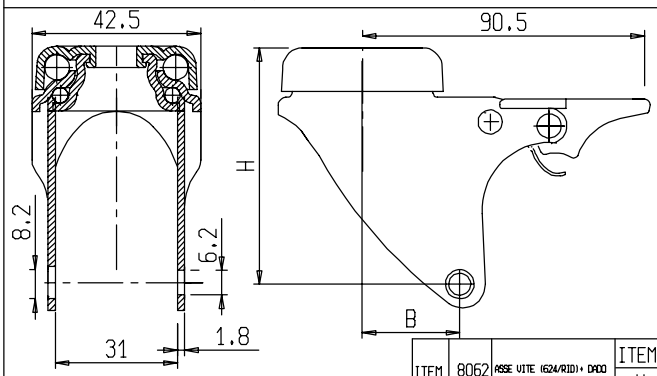

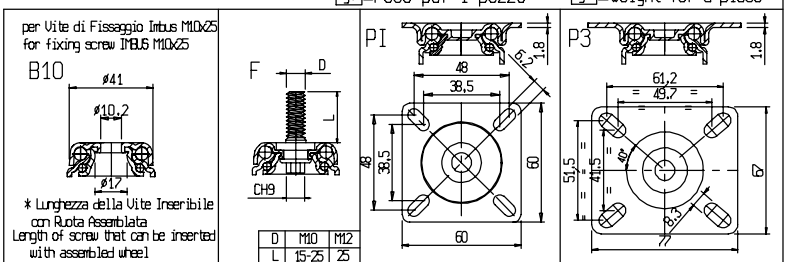

CROMATO
CHROME PLATED

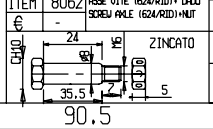

ITEM	75MFT/B10	75MFT/F	75MFT/PI	75MFT/P3
H	63.5	63.5	63.5	63.5
B	30	30	30	30
gr	228	260	250	266

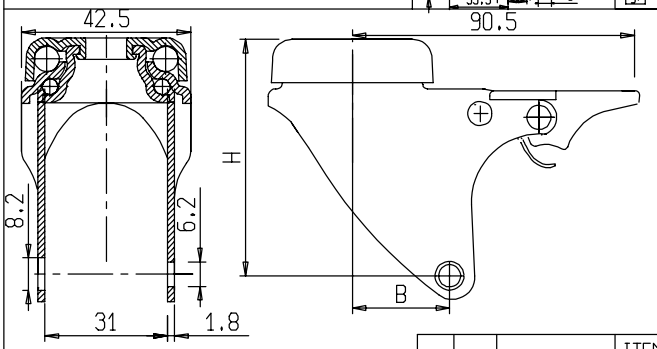

CATAFORESI NERA
BLACK CATAFORESI

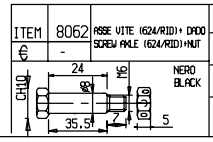

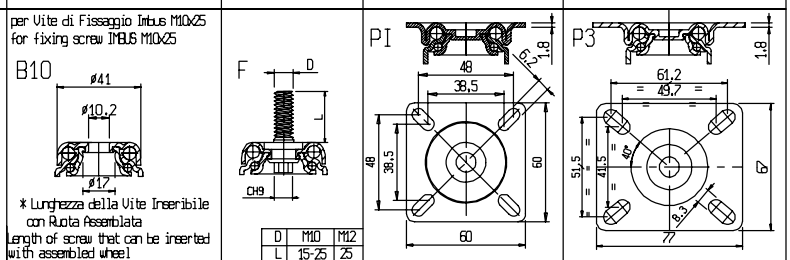

ITEM	75MFT/B10	75MFT/F	75MFT/PI	75MFT/P3
H	63.5	63.5	63.5	63.5
B	30	30	30	30
gr	228	260	250	272

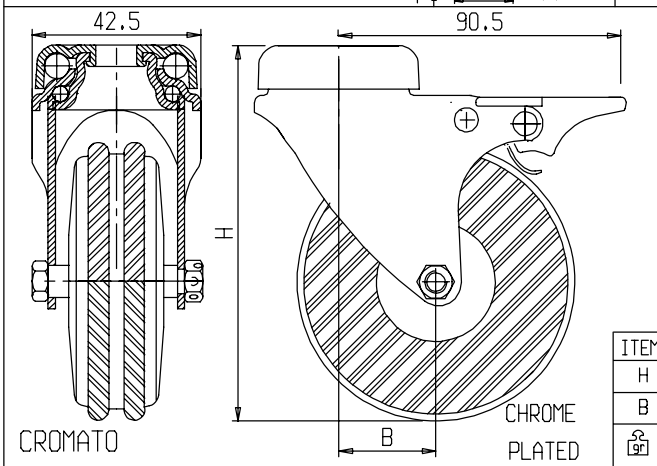

CROMATO
CHROME PLATED

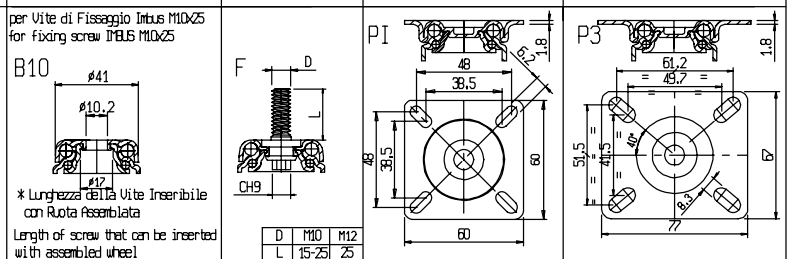

ITEM	75MFT/WB10	75MFT/WF	75MFT/WPI	75MFT/WP3
H	101	101	101	101
B	30	30	30	30
gr	318	343	356	272

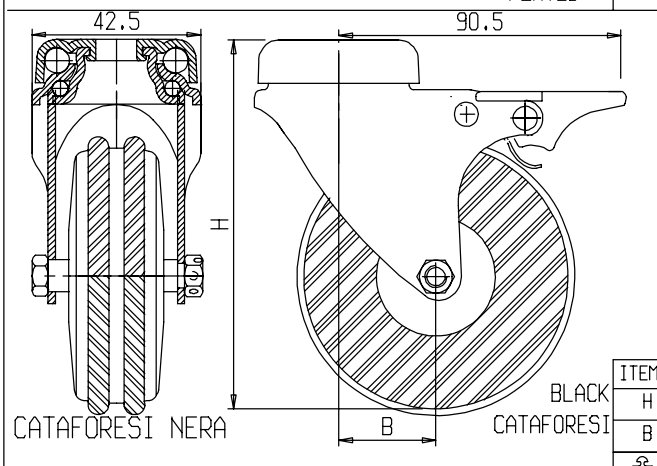

CATAFORESI NERA
BLACK CATAFORESI

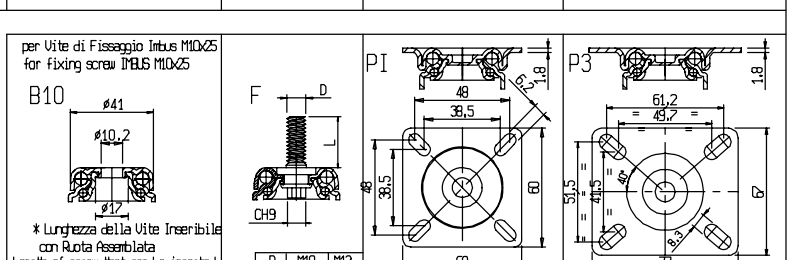

ITEM	75MFT/WB10	75MFT/WF	75MFT/WPI	75MFT/WP3
H	101	101	101	101
B	30	30	30	30
gr	318	343	356	272

Supporti girevoli Cromati e Cataforesi Nera
Swivel forks with chrome-plating and black cataphoresis treatment

Complessivi Assemblati a Ruote 80MW
Castors assembled with the wheels 80MW

Trattamento superficiale Supporti: Cromatura Brillante UNI ISO 208
Cataforesi Nera UNI ISO 208

Forks surface treatment: Shiny chrome-plating UNI ISO 208
Black cataphoresis UNI ISO 208

80W

Requisiti dei Complessivi Assemblati con Ruote 80MW — Requirements of the castors assembled with wheels 80MW

Portata Dinamica conforme UNI EN 12527 — Dynamic load capacity conform UNI EN 12527

Portata Statica conforme UNI EN 12527 * — Static load capacity conform UNI EN 12527*

* La portata statica indicata per i soli supporti corrisponde a 1.5 portata dinamica verificata secondo UNI 12527 montando una ruota in Nylon

* The static load capacity mentioned for the only forks correspond to 1.5 of dynamic load capacity checked according to UNI 12527 assembling with a nylon wheel

daN D	40
daN S	60

gr = Peso per 1 pezzo — gr = Weight for a piece

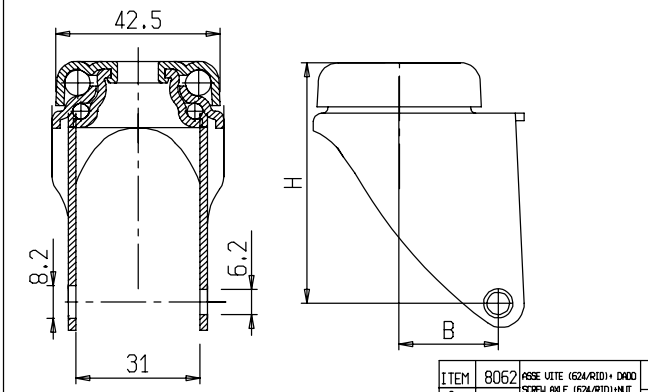

CROMATO
CHROME PLATED

ITEM	8062	ASSE VITE (624/RID)+ DADO SCREW AXLE (624/RID)+NUT
€	-	

ZINCATO

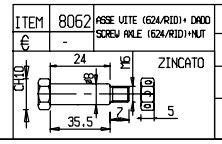

* per Vite di Fissaggio Imbus M10x25
for fixing screw IMBUS M10x25

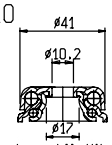

* Lunghezza della Vite Inseribile con Ruota Assemblata
Length of screw that can be inserted with assembled wheel

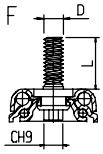

D	M10	M12
L	15-25	25

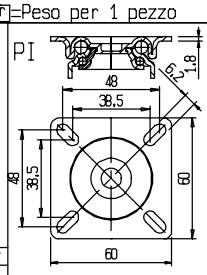

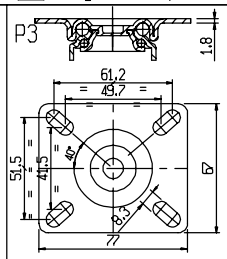

ITEM	80M/B10	80M/F	80M/PI	80M/P3
H	63.5	63.5	63.5	63.5
B	30	30	30	30
gr	162	187	200	216

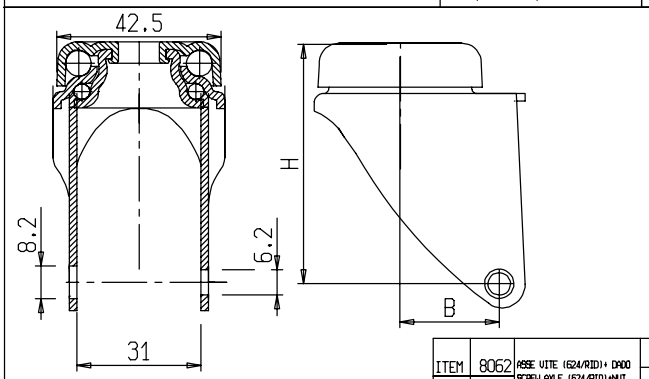

CATAFORESI NERA
BLACK CATAFORESI

ITEM	8062	ASSE VITE (624/RID)+ DADO SCREW AXLE (624/RID)+NUT
€	-	

NERO
BLACK

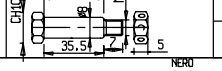

* per Vite di Fissaggio Imbus M10x25
for fixing screw IMBUS M10x25

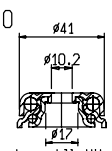

* Lunghezza della Vite Inseribile con Ruota Assemblata
Length of screw that can be inserted with assembled wheel

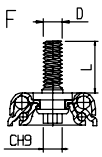

D	M10	M12
L	15-25	25

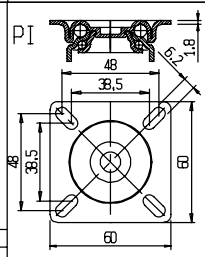

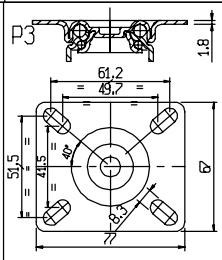

ITEM	80M/B10	80M/F	80M/PI	80M/P3
H	63.5	63.5	63.5	63.5
B	30	30	30	30
gr	162	187	200	216

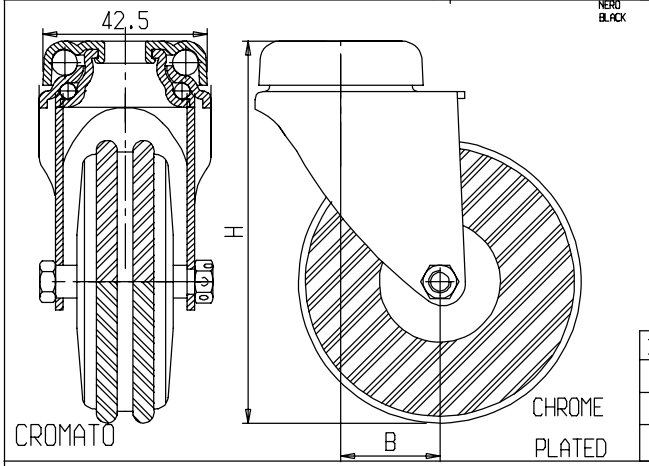

CROMATO
CHROME PLATED

* per Vite di Fissaggio Imbus M10x25
for fixing screw IMBUS M10x25

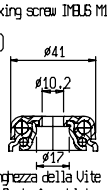

* Lunghezza della Vite Inseribile con Ruota Assemblata
Length of screw that can be inserted with assembled wheel

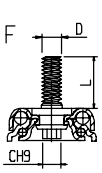

D	M10	M12
L	15-25	25

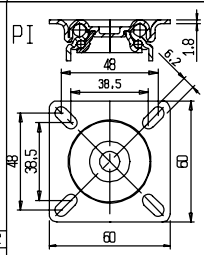

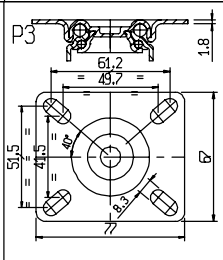

ITEM	80M/WB10	80M/WF	80M/WPI	80M/WP3
H	103.5	103.5	103.5	103.5
B	30	30	30	30
gr	259	284	297	313

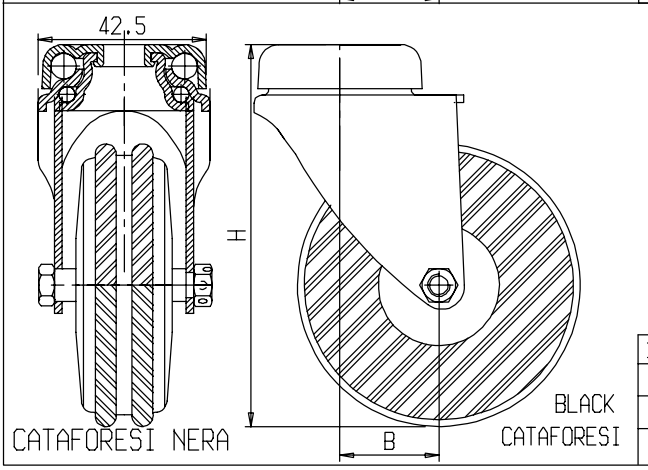

CATAFORESI NERA
BLACK CATAFORESI

* per Vite di Fissaggio Imbus M10x25
for fixing screw IMBUS M10x25

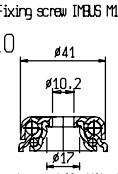

* Lunghezza della Vite Inseribile con Ruota Assemblata
Length of screw that can be inserted with assembled wheel

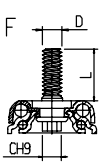

D	M10	M12
L	15-25	25

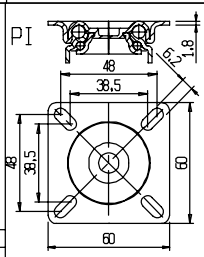

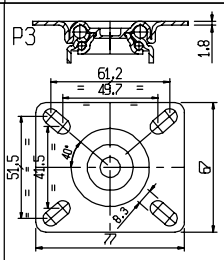

ITEM	80M/WB10	80M/WF	80M/WPI	80M/WP3
H	103.5	103.5	103.5	103.5
B	30	30	30	30
gr	259	284	297	313

Supporti girevoli con freno Cromati e Cataforesi Nera | Complessivi Assemblati a Ruote 80MW

Swivel foks with brake with chrome-plating and black cataphoresis treatment | Castors assembled with the wheels 80MW

Trattamento superficiale Supporti: Cromatura Brillante UNI ISO 208
Cataforesi Nera UNI ISO 208

Forks surface treatment : Shiny chrome-plating UNI ISO 208
Black cataphoresis UNI ISO 208

80WFT

Requisiti dei Complessivi Assemblati con Ruote 80MW — Requirements of the castors assembled with wheels 80MW

Portata Dinamica conforme UNI EN 12527 — Dynamic load capacity conform UNI EN 12527

Portata Statica conforme UNI EN 12527 * — Static load capacity conform UNI EN 12527 *

Resistenza Pssiva del Dispositivo Frenante Conforme UNI EN 12527 — Passive resistance of braking device in compliance with UNI EN 12527

* La portata statica indicata per i soli supporti corrisponde a 1.5 portata dinamica verificata secondo UNI 12527 montando una ruota in Nylon

* The static load capacity mentioned for the only forks correspond to 1.5 of dynamic load capacity checked according to UNI 12527 assembling with a nylon wheel

daN D	40
daN S	60
daN FT	

gr = Peso per 1 pezzo — gr = Weight for a piece

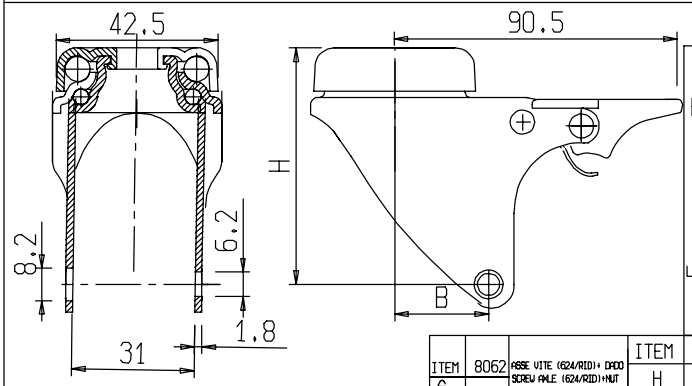

CROMATO
CHROME PLATED

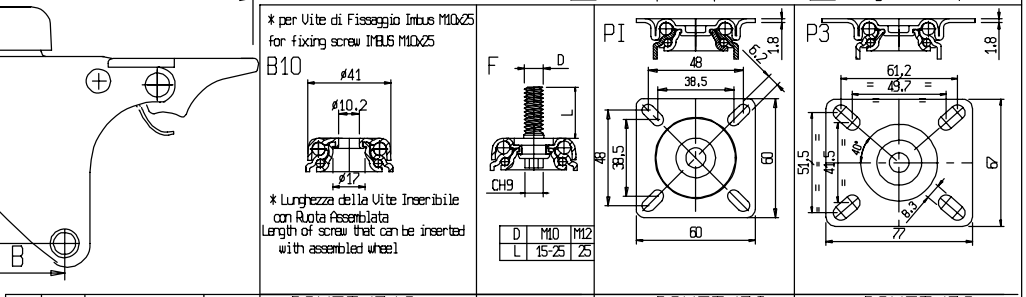

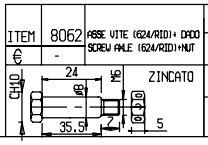

ITEM	80MFT/B10	80MFT/F	80MFT/PI	80MFT/P3
H	63.5	63.5	63.5	63.5
B	30	30	30	30
gr	228	260	250	266

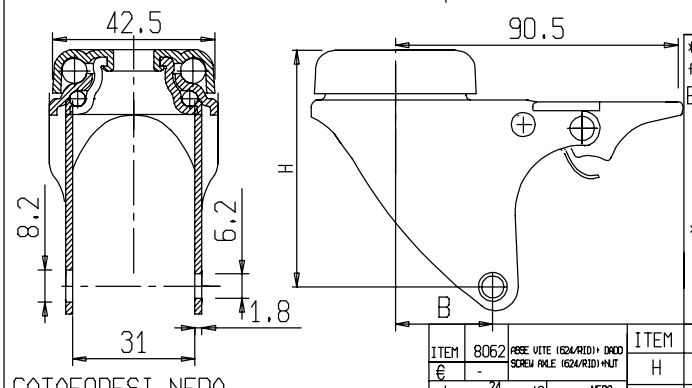

CATAFORESI NERA
BLACK CATAFORESI

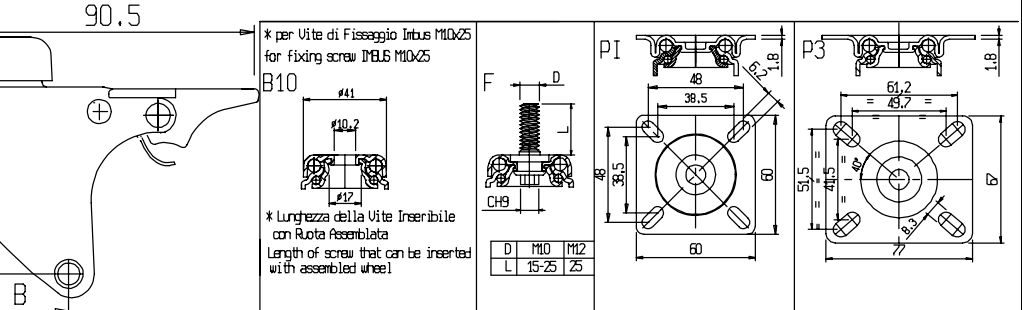

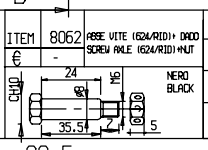

ITEM	80MFT/B10	80MFT/F	80MFT/PI	80MFT/P3
H	63.5	63.5	63.5	63.5
B	30	30	30	30
gr	228	260	250	266

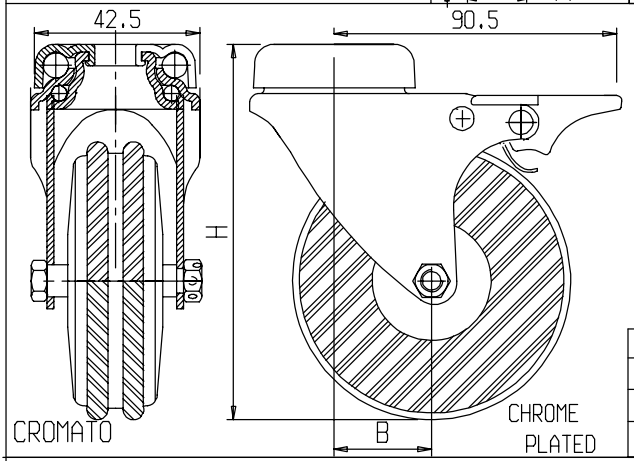

CROMATO
CHROME PLATED

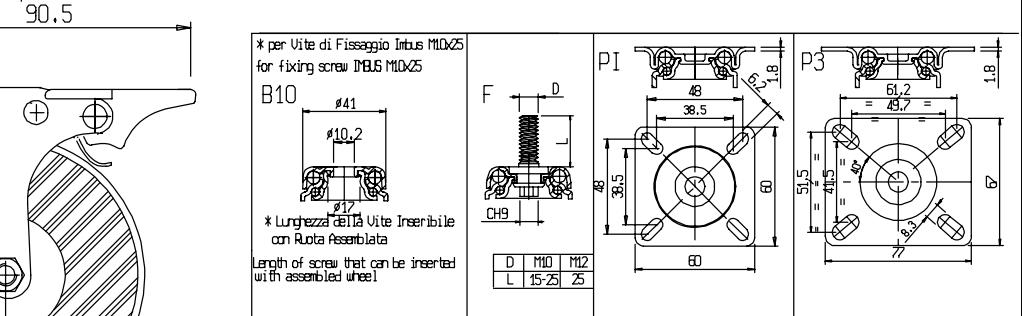

ITEM	80MFT/WB10	80MFT/WF	80MFT/WPI	80MFT/WP3
H	103.5	103.5	103.5	103.5
B	30	30	30	30
gr	325	357	363	379

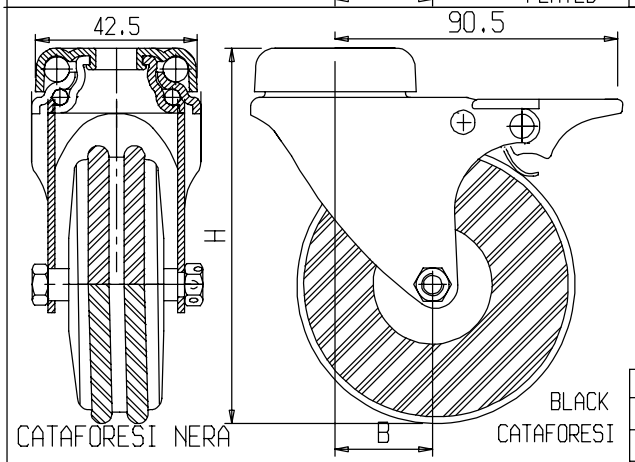

CATAFORESI NERA
BLACK CATAFORESI

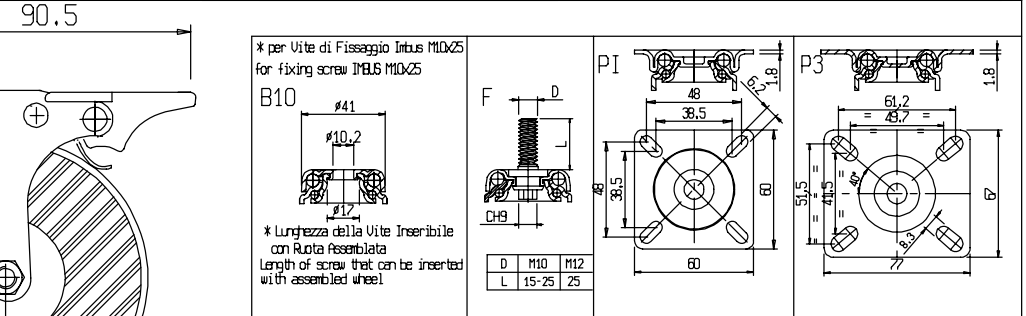

ITEM	80MFT/WB10	80MFT/WF	80MFT/WPI	80MFT/WP3
H	103.5	103.5	103.5	103.5
B	30	30	30	30
gr	325	357	363	379

Supporti girevoli Cromati e Cataforesi Nera
Swivel forks with chrome-plating and black cataphoresis treatment

Complessivi Assemblati a Ruote 100MW
Castors assembled with the wheels 100MW

Trattamento superficiale Supporti: Cromatura Brillante UNI ISO 208
Cataforesi Nera UNI ISO 208

Forks surface treatment: Shiny chrome-plating UNI ISO 208
Black cataphoresis UNI ISO 208

100W

Requisiti dei Complessivi Assemblati con Ruote 100MW — Requirements of the castors assembled with wheels 100MW

Portata Dinamica conforme UNI EN 12527 — Dynamic load capacity conform UNI EN 12527

Portata Statica conforme UNI EN 12527 * — Static load capacity conform UNI EN 12527 *

* La portata statica indicata per i soli supporti corrisponde a 1.5 portata dinamica verificata secondo UNI 12527 montando una ruota in Nylon

* The static load capacity mentioned for the only forks correspond to 1.5 of dynamic load capacity checked according to UNI 12527 assembling with a nylon wheel

daN D	60
daN S	90

gr = Peso per 1 pezzo — gr = Weight for a piece

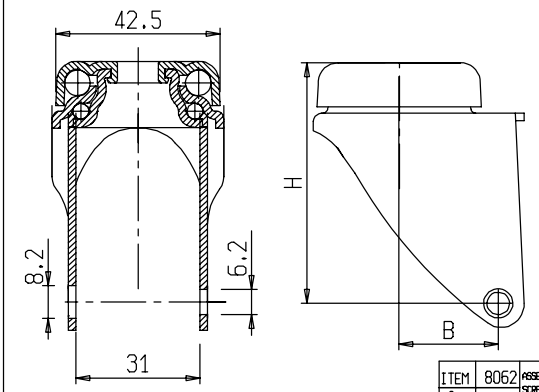

CROMATO
CHROME PLATED

ITEM	8062	ASSE VITE (624/RID)+ DADO SCREW AXLE (624/RID)+NUT
€	-	

ZINCATO

* per Vite di Fissaggio Imbus M10x25
for fixing screw IMBUS M10x25

B10 — ø41, ø10.2, ø17

* Lunghezza della Vite Inseribile con Ruota Assemblata
Length of screw that can be inserted with assembled wheel.

F — D, L, CH9

D	M10	M12
L	15-25	25

PI — 48, 38.5, 5.2, 1.8, 60

P3 — 61.2, 49.7, 1.8, 51.5, 41.5, 40°, 67, 8.3

ITEM	100M/B10	100M/F	100M/PI	100M/P3
H	72.5	72.5	72.5	72.5
B	31	31	31	31
gr	174	199	204	220

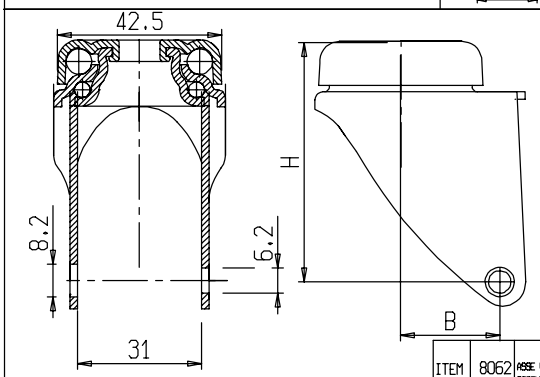

CATAFORESI NERA
BLACK CATAFORESI

ITEM	8062	ASSE VITE (624/RID)+ DADO SCREW AXLE (624/RID)+NUT
€	-	

NERO BLACK

* per Vite di Fissaggio Imbus M10x25
for fixing screw IMBUS M10x25

B10 — ø41, ø10.2, ø17

* Lunghezza della Vite Inseribile con Ruota Assemblata
Length of screw that can be inserted with assembled wheel.

F — D, L, CH9

D	M10	M12
L	15-25	25

PI — 48, 38.5, 5.2, 1.8, 60

P3 — 61.2, 49.7, 1.8, 51.5, 41.5, 40°, 67, 8.3

ITEM	100M/B10	100M/F	100M/PI	100M/P3
H	72.5	72.5	72.5	72.5
B	31	31	31	31
gr	174	199	204	220

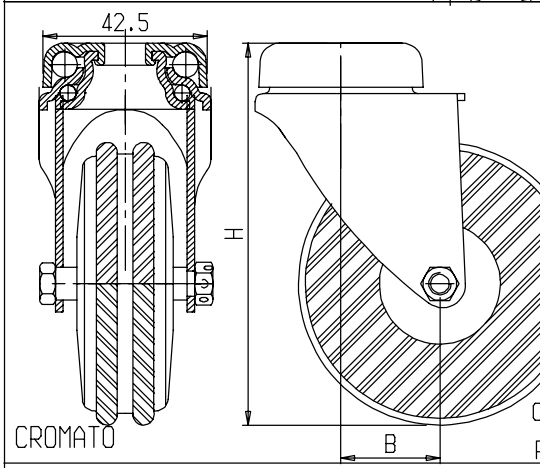

CROMATO
CHROME PLATED

* per Vite di Fissaggio Imbus M10x25
for fixing screw IMBUS M10x25

B10 — ø41, ø10.2, ø17

* Lunghezza della Vite Inseribile con Ruota Assemblata
Length of screw that can be inserted with assembled wheel.

F — D, L, CH9

D	M10	M12
L	15-25	25

PI — 48, 38.5, 5.2, 1.8, 60

P3 — 61.2, 49.7, 1.8, 51.5, 41.5, 40°, 67, 8.3

ITEM	100M/WB10	100M/WF	100M/WPI	100M/WP3
H	122.5	122.5	122.5	122.5
B	31	31	31	31
gr	323	348	361	377

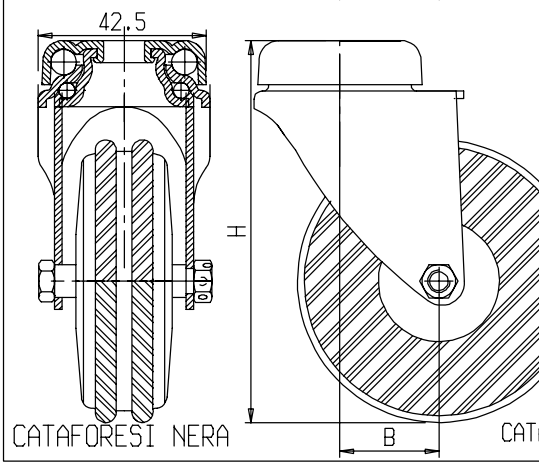

CATAFORESI NERA
BLACK CATAFORESI

* per Vite di Fissaggio Imbus M10x25
for fixing screw IMBUS M10x25

B10 — ø41, ø10.2, ø17

* Lunghezza della Vite Inseribile con Ruota Assemblata
Length of screw that can be inserted with assembled wheel

F — D, L, CH9

D	M10	M12
L	15-25	25

PI — 48, 38.5, 5.2, 1.8, 60

P3 — 61.2, 49.7, 1.8, 51.5, 41.5, 40°, 67, 8.3

ITEM	100M/WB10	100M/WF	100M/WPI	100M/WP3
H	122.5	122.5	122.5	122.5
B	31	31	31	31
gr	323	348	361	377

Supporti girevoli con freno Cromati e Cataforesi Nera

Swivel foks with brake with chrome-plating and black cataphoresis treatment

Complessivi Assemblati a Ruote 100MW

Castors assembled with the wheels 100MW

Trattamento superficiale Supporti: Cromatura Brillante UNI ISO 208
Cataforesi Nera UNI ISO 208

Forks surface treatment : Cromatura Brillante UNI ISO 208
Cataforesi Nera UNI ISO 208

100WFT

Requisiti dei Complessivi Assemblati con Ruote 100MW Requirements of the castors assembled with wheels 100MW

Portata Dinamica conforme UNI EN 12527 Dynamic load capacity conform UNI EN 12527

Portata Statica conforme UNI EN 12527 * Static load capacity conform UNI EN 12527 *

Resistenza Pssiva del Dispositivo Frenante Conforme UNI EN 12527 Passive resistance of braking device in compliance with UNI EN 12527

* La portata statica indicata per i soli supporti corrisponde a 1.5 portata dinamica verificata secondo UNI 12527 montando una ruota in Nylon

* The static load capacity mentioned for the only forks correspond to 1.5 of dynamic load capacity checked according to UNI 12527 assembling with a nylon wheel

daN D	60
daN S	90
daN FT	

gr=Peso per 1 pezzo gr=Weight for a piece

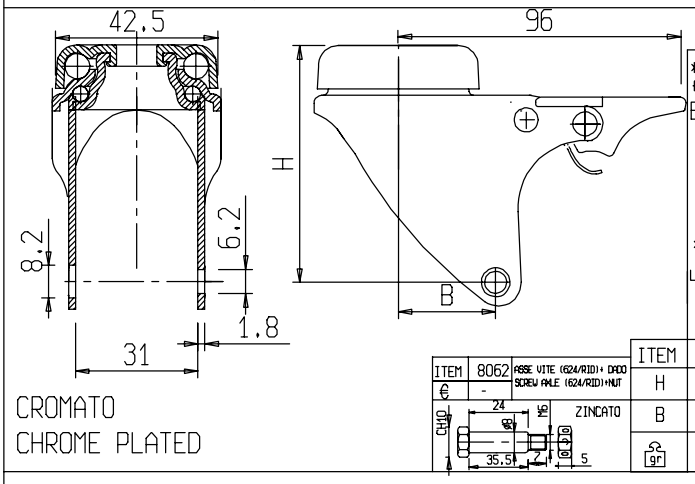

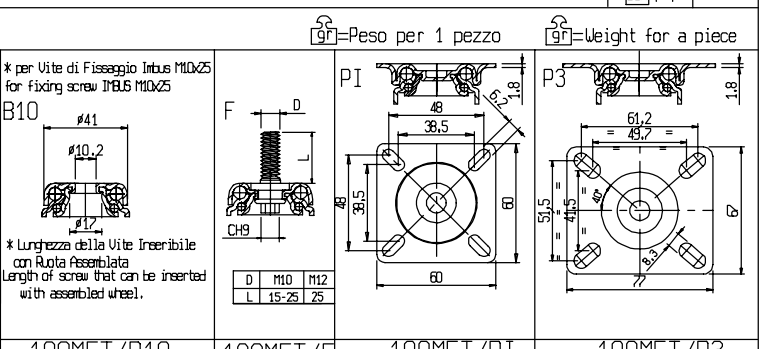

ITEM	100MFT/B10	100MFT/F	100MFT/PI	100MFT/P3
H	72.5	72.5	72.5	72.5
B	31	31	31	31
gr	244	276	270	286

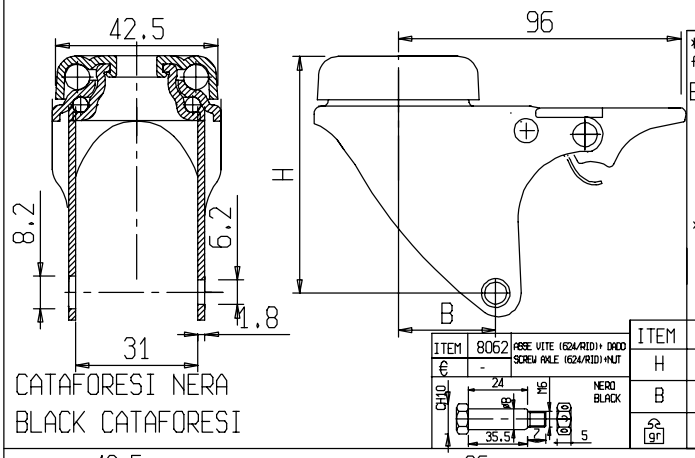

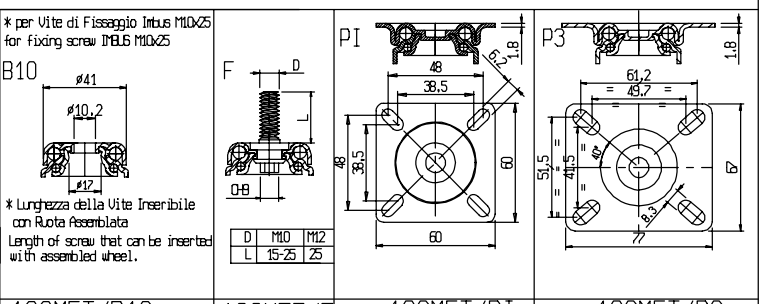

ITEM	100MFT/B10	100MFT/F	100MFT/PI	100MFT/P3
H	72.5	72.5	72.5	72.5
B	31	31	31	31
gr	244	276	270	286

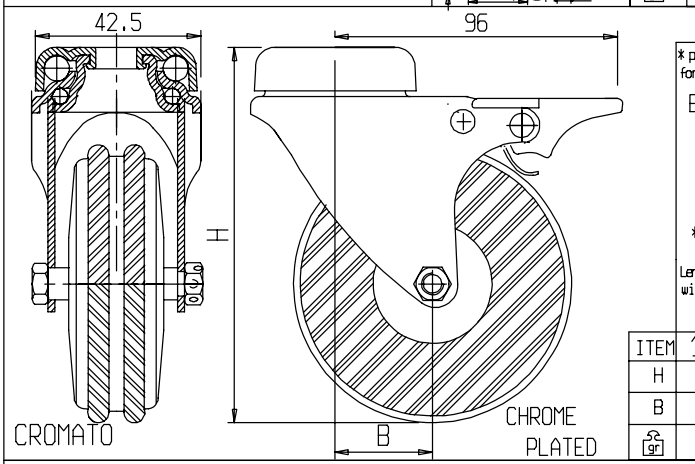

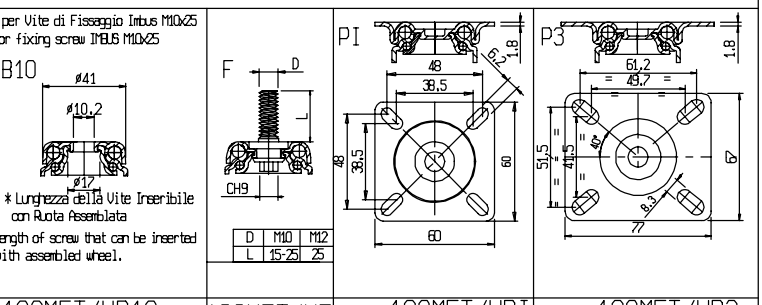

ITEM	100MFT/WB10	100MFT/WF	100MFT/WPI	100MFT/WP3
H	122.5	122.5	122.5	122.5
B	31	31	31	31
gr	401	433	439	455

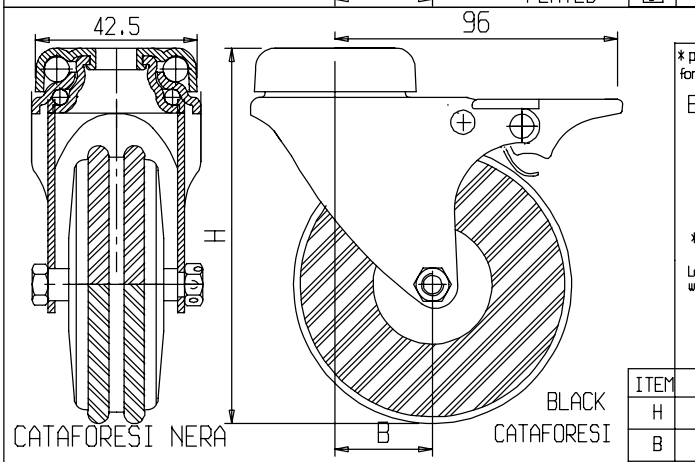

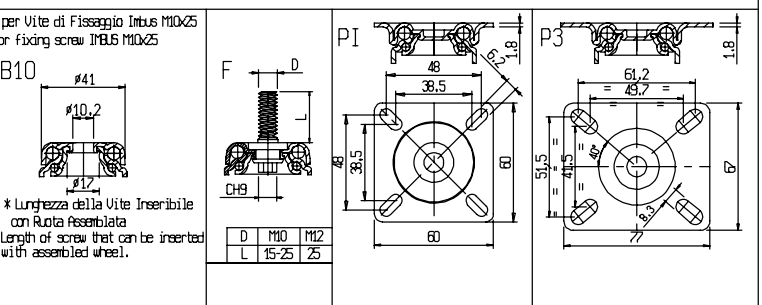

ITEM	100MFT/WB10	100MFT/WF	100MFT/WPI	100MFT/WP3
H	122.5	122.5	122.5	122.5
B	31	31	31	31
gr	401	433	439	455

Supporti girevoli Cromati e Cataforesi Nera
Swivel forks with chrome-plating and black cataphoresis treatment

Complessivi Assemblati a Ruote 125MW
Castors assembled with the wheels 125MW

Trattamento superficiale Supporti: Cromatura Brillante UNI ISO 208
Cataforesi Nera UNI ISO 208

Forks surface treatment: Shiny chrome-plating UNI ISO 208
Black cataphoresis UNI ISO 208

125W

Requisiti dei Complessivi Assemblati con Ruote 125MW — Requirements of the castors assembled with wheels 125MW

Portata Dinamica conforme UNI EN 12527 — Dynamic load capacity conform UNI EN 12527

Portata Statica conforme UNI EN 12527 * — Static load capacity conform UNI EN 12527 *

* La portata statica indicata per i soli supporti corrisponde a 1.5 portata dinamica verificata secondo UNI 12527 montando una ruota in Nylon

* The static load capacity mentioned for the only forks correspond to 1.5 of dynamic load capacity checked according to UNI 12527 assembling with a nylon wheel

daN D	60
daN S	90

gr = Peso per 1 pezzo — gr = Weight for a piece

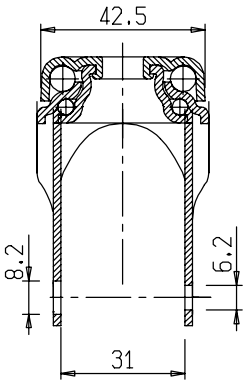

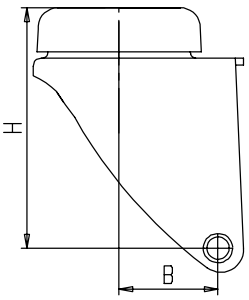

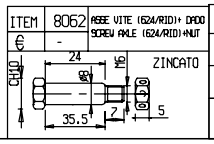

CROMATO
CHROME PLATED

* per Vite di Fissaggio Imbus M10x25
for fixing screw IMBUS M10x25

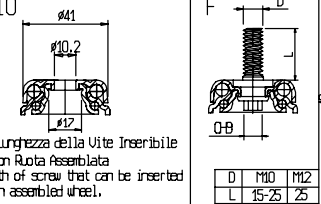

* Lunghezza della Vite Inseribile con Ruota Assemblata
Length of screw that can be inserted with assembled wheel.

D	M10	M12
L	15-25	25

ITEM	125M/B10	125M/F	125M/PI	125M/P3
H	87.5	87.5	87.5	87.5
B	34.5	34.5	34.5	34.5
gr	210	235	239	255

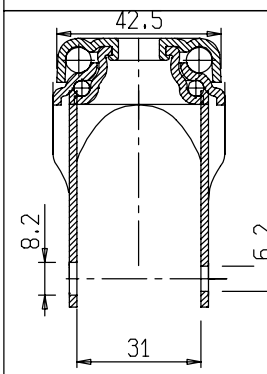

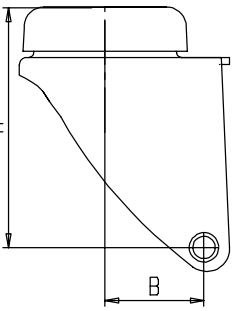

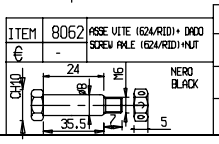

CATAFORESI NERA
BLACK CATAFORESI

* per Vite di Fissaggio Imbus M10x25
for fixing screw IMBUS M10x25

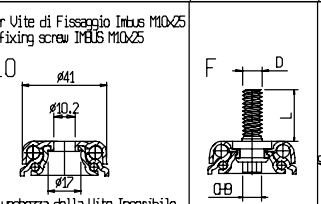

* Lunghezza della Vite Inseribile con Ruota Assemblata
Length of screw that can be inserted with assembled wheel.

D	M10	M12
L	15-25	25

ITEM	125M/B10	125M/F	125M/PI	125M/P3
H	87.5	87.5	87.5	87.5
B	34.5	34.5	34.5	34.5
gr	210	235	239	255

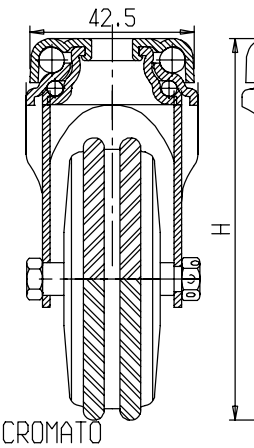

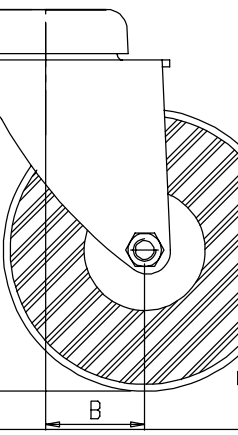

CROMATO
CHROME PLATED

* per Vite di Fissaggio Imbus M10x25
for fixing screw IMBUS M10x25

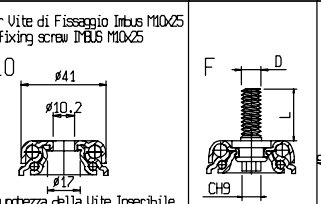

* Lunghezza della Vite Inseribile con Ruota Assemblata
Length of screw that can be inserted with assembled wheel.

D	M10	M12
L	15-25	25

ITEM	125M/WB10	125M/WF	125M/WPI	125M/WP3
H	150	150	150	150
B	34.5	34.5	34.5	34.5
gr	433	458	471	487

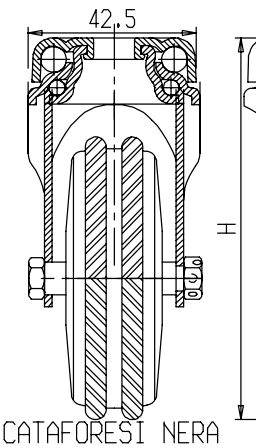

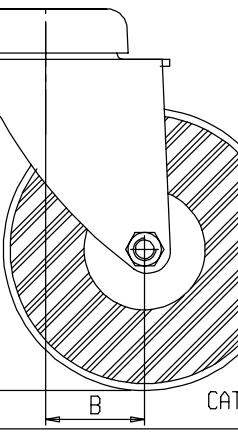

CATAFORESI NERA
BLACK CATAFORESI

* per Vite di Fissaggio Imbus M10x25
for fixing screw IMBUS M10x25

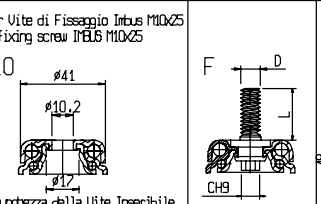

* Lunghezza della Vite Inseribile con Ruota Assemblata
Length of screw that can be inserted with assembled wheel.

D	M10	M12
L	15-25	25

ITEM	125M/WB10	125M/WF	125M/WPI	125M/WP3
H	150	150	150	150
B	34.5	34.5	34.5	34.5
gr	433	458	471	487

Supporti girevoli con freno Cromati e Cataforesi Nera

Swivel foks with brake with chrome-plating and black cataphoresis treatment

Complessivi Assemblati a Ruote 125MW

Castors assembled with the wheels 125MW

Trattamento superficiale Supporti: Cromatura Brillante UNI ISO 208
Cataforesi Nera UNI ISO 208

Forks surface treatment : Cromatura Brillante UNI ISO 208
Cataforesi Nera UNI ISO 208

125WFT

Requisiti dei Complessivi Assemblati con Ruote 125MW — Requirements of the castors assembled with wheels 125MW

Portata Dinamica conforme UNI EN 12527 — Dynamic load capacity conform UNI EN 12527

Portata Statica conforme UNI EN 12527 * — Static load capacity conform UNI EN 12527 *

Resistenza Pssiva del Dispositivo Frenante Conforme UNI EN 12527 — Passive resistance of braking device in compliance with UNI EN 12527

* La portata statica indicata per i soli supporti corrisponde a 1.5 portata dinamica verificata secondo UNI 12527 montando una ruota in Nylon

* The static load capacity mentioned for the only forks correspond to 1.5 of dynamic load capacity checked according to UNI 12527 assembling with a nylon wheel

daN D	60
daN S	90
daN FT	

gr = Peso per 1 pezzo — gr = Weight for a piece

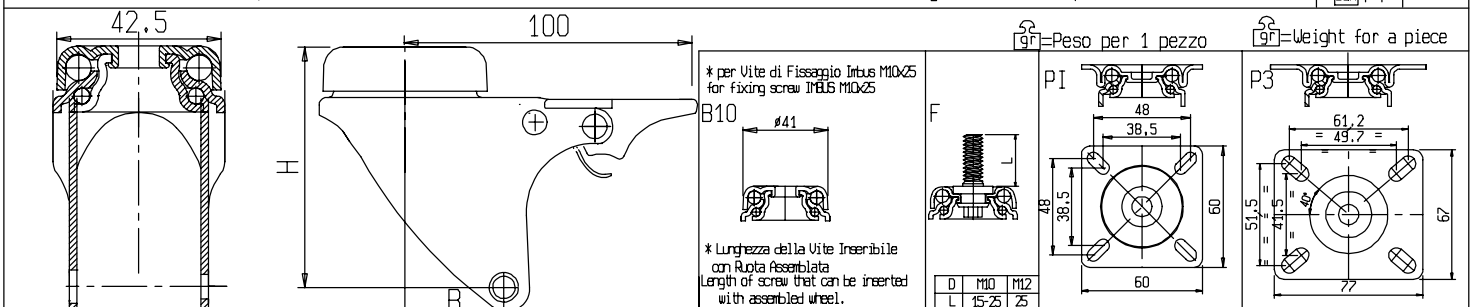

CROMATO
CHROME PLATED

ITEM	8062	ASSE VITE (624/RID)+ DADO SCREW PALE (624/RID)+NUT
€	-	

ZINCATO

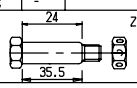

ITEM	125MFT/B10	125MFT/F	125MFT/PI	125MFT/P3
H	87.5	87.5	87.5	87.5
B	34.5	34.5	34.5	34.5
gr	288	320	320	336

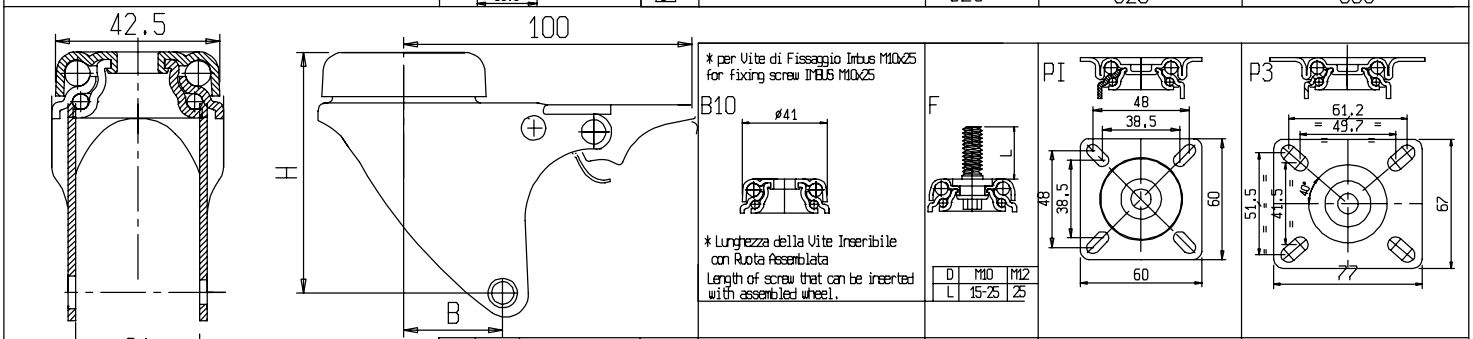

CATAFORESI NERA
BLACK CATAFORESI

ITEM	8062	ASSE VITE (624/RID)+ DADO SCREW PALE (624/RID)+NUT
€	-	

NERO BLACK

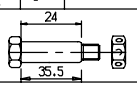

ITEM	125MFT/B10	125MFT/F	125MFT/PI	125MFT/P3
H	87.5	87.5	87.5	87.5
B	34.5	34.5	34.5	34.5
gr	288	320	320	336

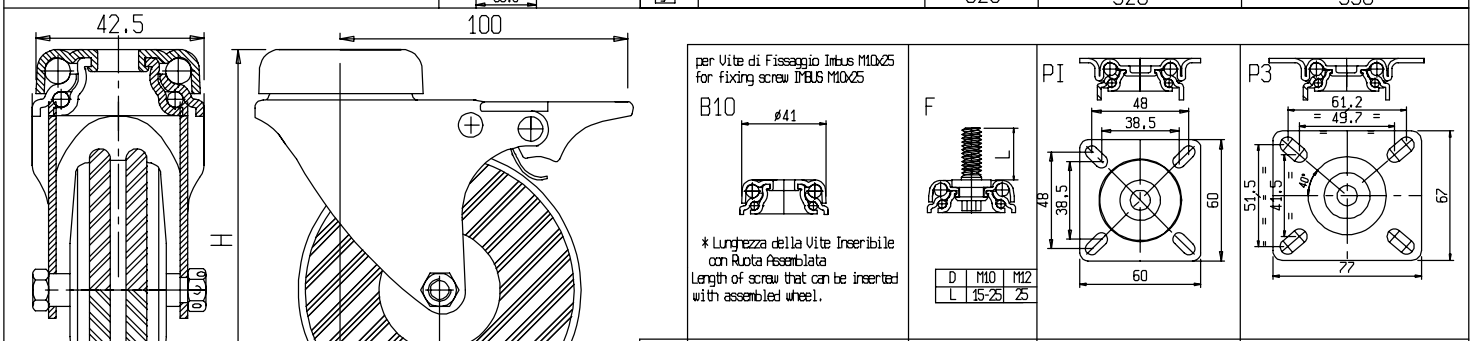

CROMATO
CHROME PLATED

ITEM	125MFT/WB10	125MFT/WF	125MFT/WPI	125MFT/WP3
H	150	150	150	150
B	34.5	34.5	34.5	34.5
gr	521	553	559	575

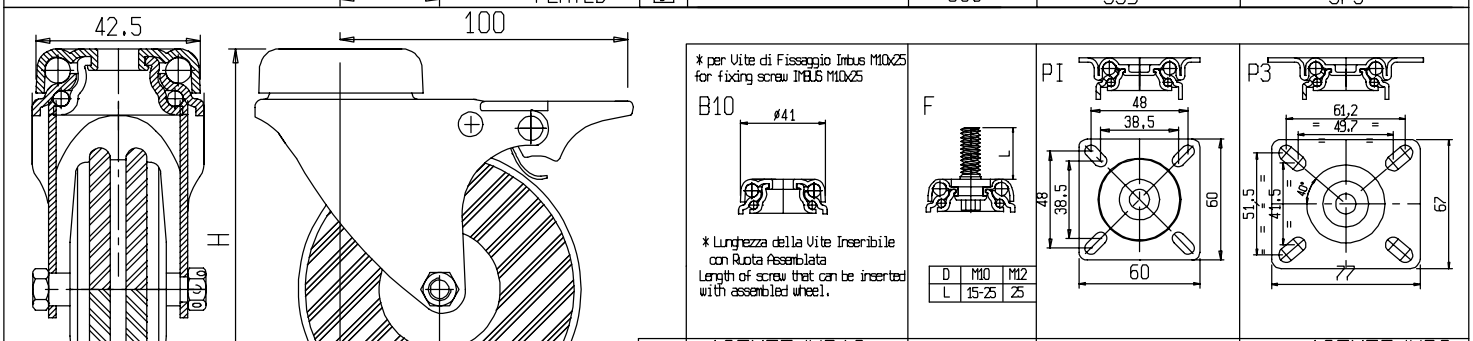

CATAFORESI NERA
BLACK CATAFORESI

ITEM	125MFT/WB10	125MFT/WF	125MFT/WPI	125MFT/WP3
H	150	150	150	150
B	34.5	34.5	34.5	34.5
gr	521	553	559	575

Ruote Adottate per Serie A nelle varie tipologie di Diametri,Battistrada.
Wheels used for A series in the various types of diameters and tyres.

Ruota tipo Wheel type		SR	N
Catteristiche del Battistrada Tyre characteristics		Gomma Sintetica Synthetic Rubber	Nylon
Durezza del Battistrada conforme UNI EN 12527 Tyre hardness in compliance with UNI EN 12527	shore A	-	>-
Temperature di Utilizzo Raccomandate Recommended working temperatures	Max=	+60°C	+40°C
	Min=	-10°C	0°C
Catteristiche del Nucleo Wheel centre characteristics		Polipropilene Polypropylene	Nylon Nylon
Catteristiche del Mozzo Hub characteristics		Foro Liscio Plain Bearing	Foro Liscio Plain Bearing

Portata Dinamica conforme UNI EN 12527 Dynamic load capacity conform UNI EN 12527	daN D	gr = Peso per 1 pezzo gr = Weight for a piece
Portata Statica conforme UNI EN 12527 Static load capacity conform UNI EN 12527	daN S	

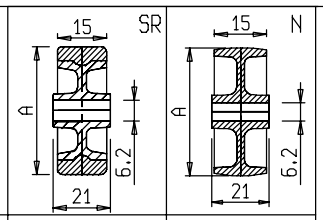

ITEM	30LSR	30LN
A	30	30
daN D	25	25
daN S	37	37
gr	10	7
ITEM	36LSR	36LN
A	36	36
daN D	30	30
daN S	45	45
gr	14	12

Gamma di Fissaggi Standard per Supporti Serie A
Range of Standard Fixings for Supports of A series forks

A Foro Passante ø8.2 per Vite di Fissaggio Imbus M8x20 (*) With bolt hole of ø8.2 for fixing screw imbus M8x20(*)	A Perno Zigrinato Rivettato With riveted knurled stem	A Perno Filettato Rivettato With riveted thread stem	Fissaggio a Piastra Integrale P4 42x42 Integral Plate type fixing P4 42x42
O	L	F	P4

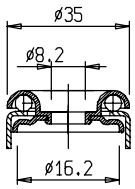

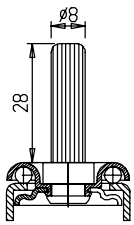

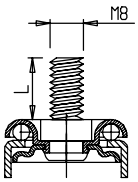

L	10-15

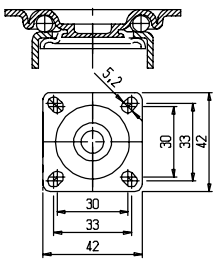

Complessivi girevoli Serie A nelle varie tipologie di:Fissaggi,Ruote assemblati.
Swivel castors of the A series with various types of fixings and assembled wheels.

Requisiti dei Complessivi assemblati alle varie Ruote Requirements of the castors assembled with the different wheels		SR	N
Portata Dinamica conforme UNI EN 12527 Dynamic load capacity conform UNI EN 12527	daN D	15.2	15.2
Portata Statica conforme UNI EN 12527 Static load capacity conform UNI EN 12527	daN S	22.8	22.8

gr = Peso per 1 pezzo
gr = Weight for a piece

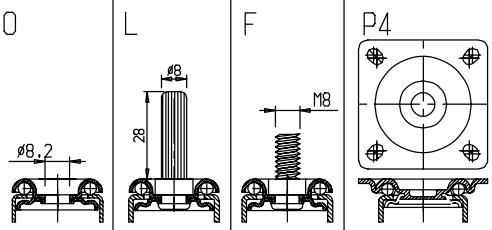

ø 30

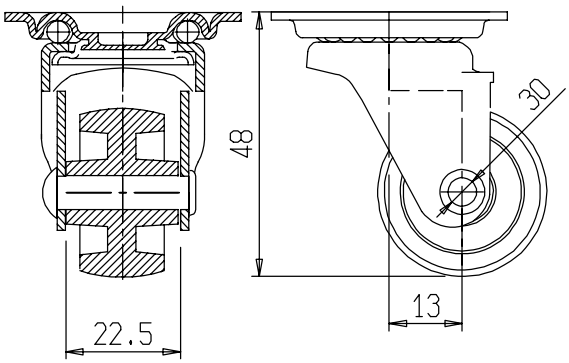

30N

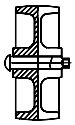

ITEM	30/O	30/L	30/F	30/P4
gr	48	68	63	72

ø 30

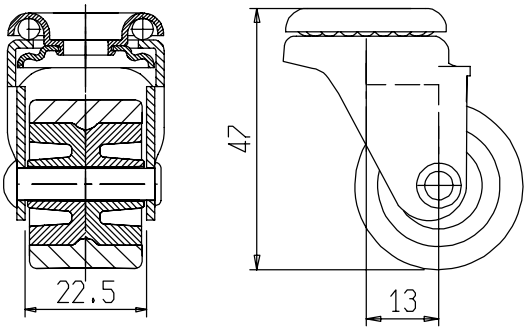

30SR

ITEM	30/SRO	30/SRL	30/SRF	30/SRP4
gr	43	63	58	67

Requisiti dei Complessivi assemblati alle varie Ruote Requirements of the castors assembled with the different wheels		SR	N
Portata Dinamica conforme UNI EN 12527 Dynamic load capacity conform UNI EN 12527	daN D	15.2	15.2
Portata Statica conforme UNI EN 12527 Static load capacity conform UNI EN 12527	daN S	22.8	22.8

ø 36

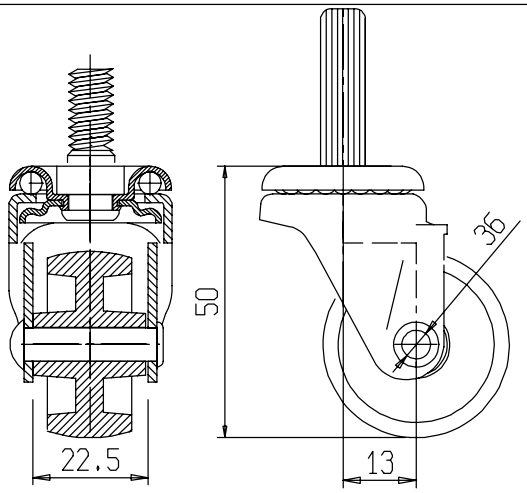

36N

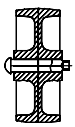

ITEM	36/O	36/L	36/F	36/P4
gr	53	71	66	74

ø 36

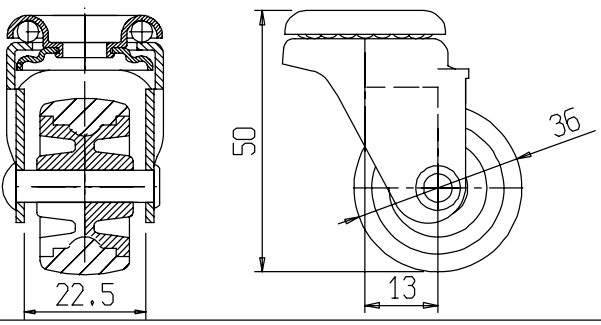

36SR

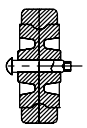

ITEM	36/SRO	36/SRL	36/SRF	36/SRP4
gr	53	71	66	74

Requisiti Ruote Serie A nelle varie tipologie di: Diametri,Battistrada,Organi di Rotolamento
Wheels series A Requirements in the various types of :Diameter,Tyre,Rolling parts

Ruota tipo Wheel type	38	43	45	40SF	40SF/G	50SF	50SF/G
Catteristiche del Battistrada Tyre characteristics	Polipropilene Polypropilyne				Gomma Sintetica Synthetic Rubber	Polipropilene Polypropylene	Gomma Sintetica Synthetic Rubber
Durezza del Battistrada conforme UNI EN 12527 (shore A) Tyre hardness in compliance with UNI EN 12527	>90				68		68
Temperature di Utilizzo Raccomandate (Max=) Recommended working temperatures	+60°C				+40°C	+60°C	+40°C
(Min=)	-10°C				0°C	-10°C	0°C
Catteristiche del Nucleo Wheel centre characteristics	Polipropilene Polypropylene						
Catteristiche del Mozzo Hub characteristics				Foro Liscio Plain Bearing	Foro Liscio Plain Bearing		

gr = Peso per 1 pezzo
gr = Weight for a piece

Portata Dinamica conforme UNI EN 12527 Dynamic load capacity conform UNI EN 12527 daN D	Resistenza al Rotolamento (FR) alla Portata Nominale Rolling resistance (FR)at rated capacity daN FR
Portata Statica conforme UNI EN 12527 Static load capacity conform UNI EN 12527 daN S	Resistenza al Superamento Ostacolo (FO) alla Portata Nominale H ostacolo=1% ø della Ruota Min 0.5 mm Obstacle overcoming resistance (FO) at rated capacity Obstacle H=1% of wheel, min.0.5 mm daN FO

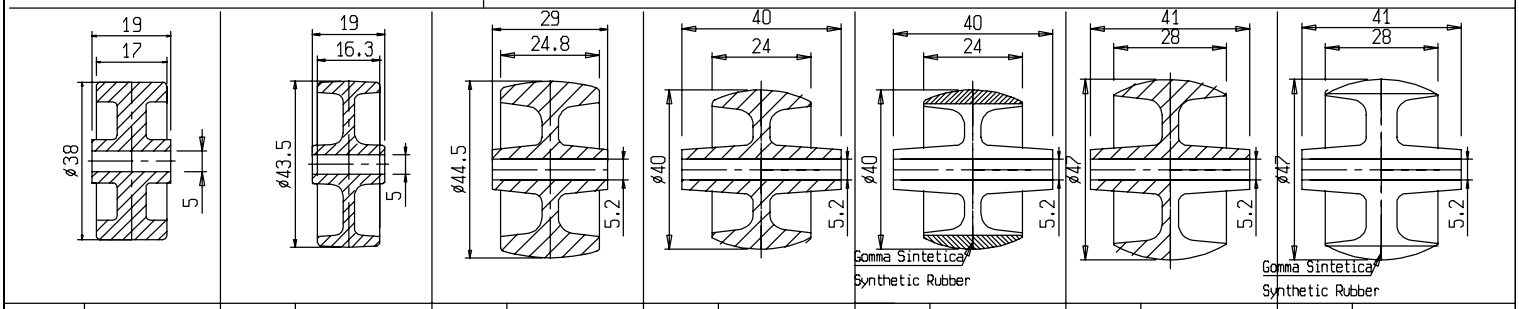

ITEM	38A	ITEM	43A	ITEM	45A	ITEM	40SF	ITEM	40SF/G	ITEM	50SF	ITEM	50SF/G
daN D		daN D	17	daN D		daN D		daN D		daN D		daN D	
daN S		daN S	25.5	daN S		daN S		daN S		daN S		daN S	
daN FR		daN FR		daN FR		daN FR		daN FR		daN FR		daN FR	
daN FO		daN FO		daN FO		daN FO		daN FO		daN FO		daN FO	
gr	11	gr	13	gr	19	gr	14	gr	18	gr	22	gr	23

Gamma di Fissaggi Standard per Supporti Serie A
Range of Standard Fixings for forks of the A series

A Foro Passante ø8.2 per Vite di Fissaggio Imbus M8x20 (*) With bolt hole of ø8.2 for fixing screw imbus M8x20(*)	A Foro Passante ø8.2 per Vite di Fissaggio Imbus M8x20 (*) With bolt hole of ø8.2 for fixing screw imbus M8x20(*)	A Perno Filettato Rivettato Dimensioni a Tabella da Specificare sempre all' ordine With riveted thread stem, dimensions as per table to be specified when placing order	Fissaggio a Piastra Integrale P3 37X37 Integral Plate fixing P4 42x42
O ø8.2	B ø8.2	F M8 15	P3 4.2 30 37 30 37
Fissaggio a Piastra Integrale P4 42X42 Integral Plate fixing P4 42x42	A Perno Zigrinato Rivettato With riveted knurled stem		
P4 5.2 30 33 42 30 33 42	L ø8 28		

Complessivi girevoli Serie A nelle varie tipologie di:Fissaggi,Ruote assemblati
Swivel castors of the A series with different types of fixings, assembled wheels

Requisiti dei Complessivi assemblati alle varie Ruote
Requirements of the castors assembled with the various wheels

Portata Dinamica conforme UNI EN 12527
Dynamic load capacity conform UNI EN 12527 daN D

Portata Statica conforme UNI EN 12527
Static load capacity conform UNI EN 12527 daN S

gr = Peso per 1 pezzo
gr = Weight for a piece

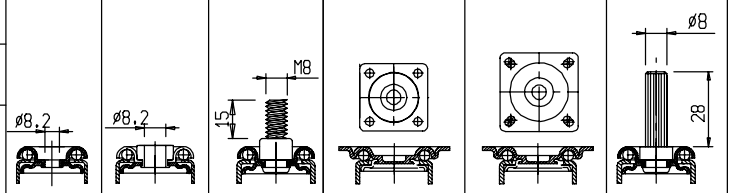

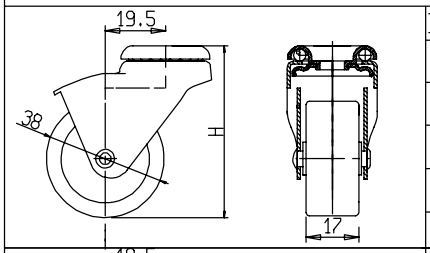

ITEM	38/0	-	38/F	-	38/P4	38/L
H	56		56		56	56
daN D	20	-	20	-	20	20
daN S	30	-	30	-	30	30
gr	52	-	64	-	73	70

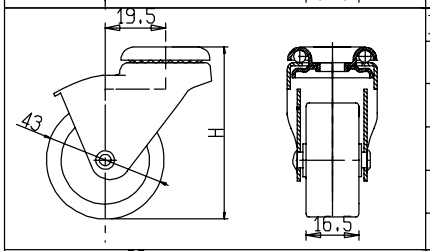

ITEM	43/0	-	43/F	-	43/P4	43/L
H	58		58		58	58
daN D	20	-	20	-	20	20
daN S	30	-	30	-	30	30
gr	54	-	67	-	71	73

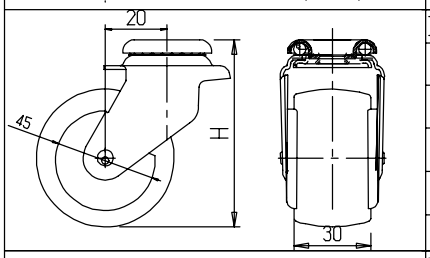

ITEM	45/0	-	45/F	-	45/P4	45/L
H	61	-	61	-	61	61
daN D	30	-	30	-	30	30
daN S	45	-	45	-	45	45
gr	76	-	89	-	97	94

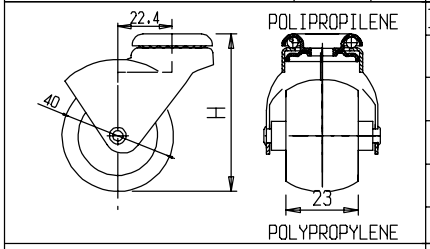

ITEM	40SF/0	40SF/B	40SF/F	40SF/P3	40SF/P4	40SF/L
H	52	52	52	52	-	52
daN D	20	20	20	20	-	20
daN S	30	30	30	30	-	30
gr	60	64	74	66	-	78

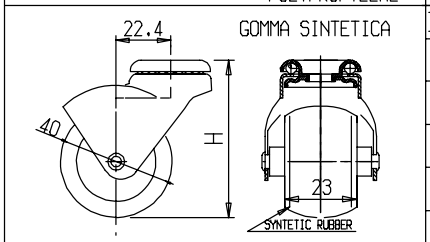

ITEM	40SF/G0	40SF/GB	40SF/GF	40SF/GP3	40SF/GP4	40SF/GL
H	52	52	52	52	-	52
daN D	20	20	20	20	-	20
daN S	30	30	30	30	-	30
gr	66	69	79	71	-	83

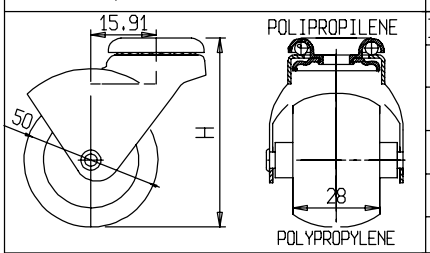

ITEM	50SF/0	50SF/B	50SF/F	50SF/P3	50SF/P4	50SF/L
H	59	59	59	59	-	59
daN D	23	23	23	23	-	23
daN S	34	34	34	34	-	34
gr	72	76	90	82	-	92

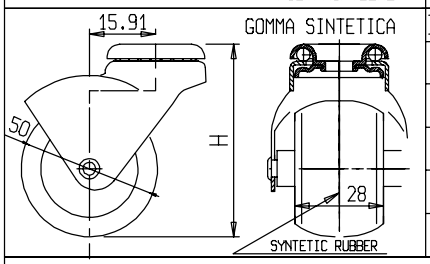

ITEM	50SF/G0	50SF/GB	50SF/GF	50SF/GP3	50SF/GP4	50SF/GL
H	59	59	59	59	-	59
daN D	23	23	23	23	-	23
daN S	34	34	34	34	-	34
gr	79	80	94	86	-	96

Complessivi Girevoli Senza Giro Sfere con Ruota POLYTENE Serie A
Swivel Castors Without Ball Bearing, with POLYTENE Wheel A Series

Portata Dinamica conforme UNI EN 12527 Dynamic load capacity conform UNI EN 12527 daN D	Portata Statica conforme UNI EN 12527 Static load capacity conform UNI EN 12527 daN S	gr = Weight for a piece gr = Peso per 1 pezzo

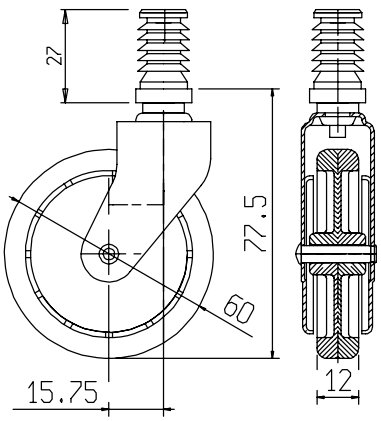

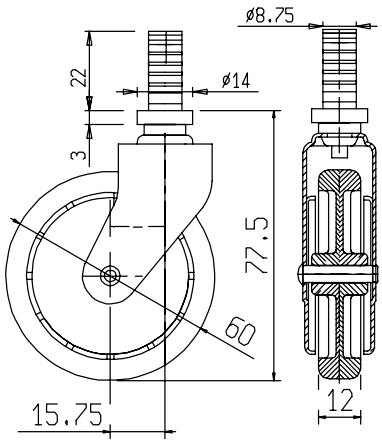

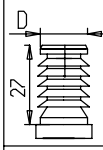

CON RIDUTTORE ALETTATO
RIBBED REDUCER

D= 12-14-16
18-20-22

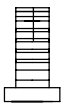

A LEGNO
FOR WOOD

ITEM	60/ASS/A	ITEM	60/ASS/NY
daN D	12	daN D	12
daN S	18	daN S	18
gr	70	gr	72

Complessivi Fissi Fuori Standard con Rulli Nylon
Fixed Castors Out Standard with Nylon Roller

ITEM	23/NFS
daN D	80
daN S	120
gr	93

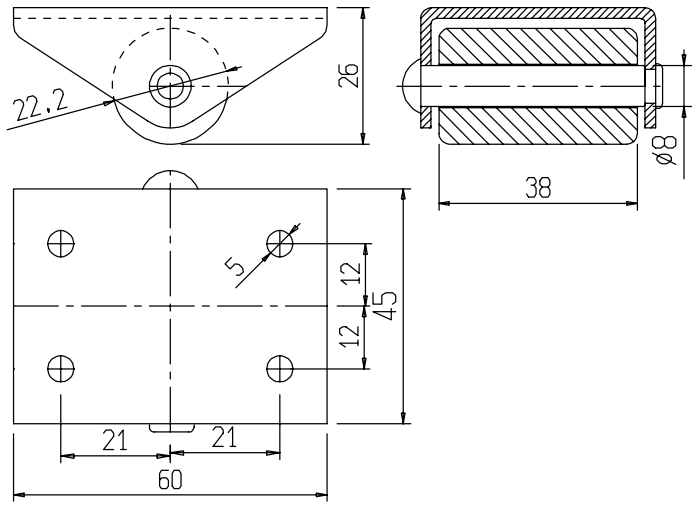

Complessivi Fissi Fuori Standard nella gamma di ruote assemblate
Fixed Castors Out Standard in the different types of assembled wheels

ITEM	25/L/SFN/H29
daN D	30
daN S	45
gr	-

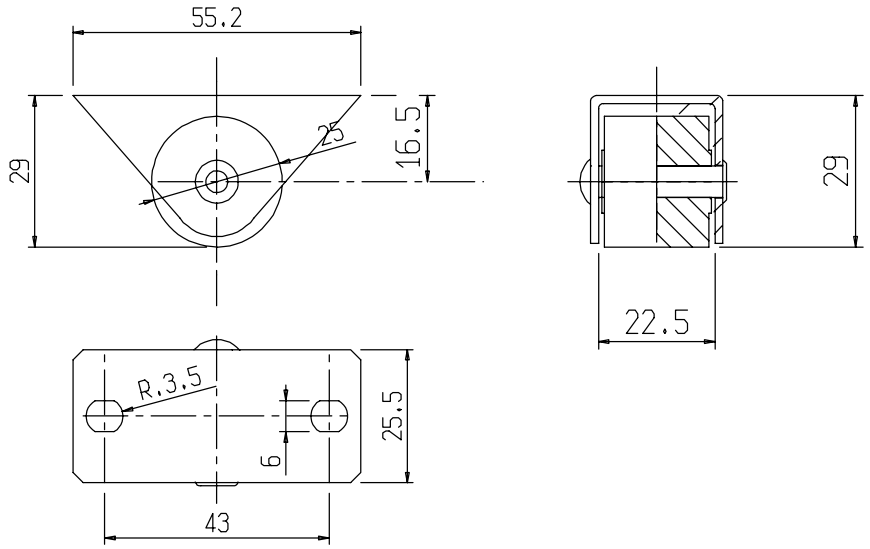

ITEM	30/L/SFSR/H33
daN D	25
daN S	38
gr	48

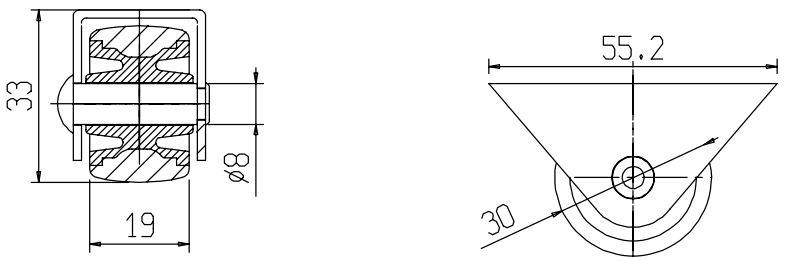

ITEM	30/L/SFN/H33
daN D	-
daN S	-
gr	-

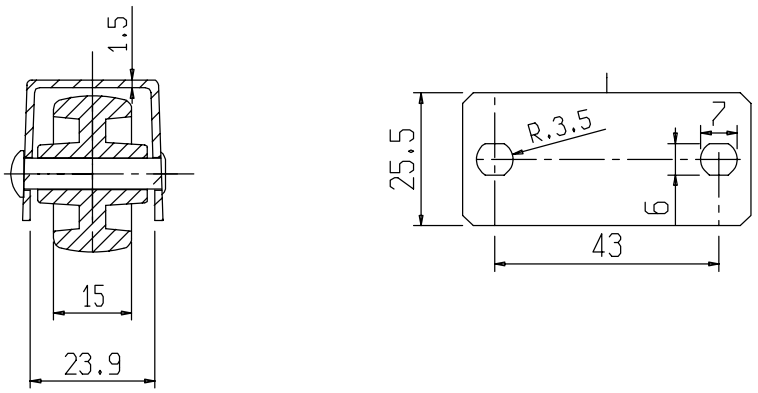

Requisiti Ruote Supermarket nelle varie tipologie di: Diametri,Battistrada,Organi di Rotolamento

Supermarket wheels requirements in the various types of:Diameter,Tyres,Rolling parts

Ruota tipo Wheel type	100Gcc/125Gcc		125WK	
Catteristiche del Battistrada Tyres characteristics	Gomma Grigia Grey Rubber		Poliuretano iniettato injected Polyurethane	
Durezza del Battistrada conforme UNI EN 12527 Tyres hardness in compliance with UNI EN 12527	shore A	84	shore A	98
Catteristiche del Nucleo Wheel centre characteristics	Polipropilene Grigio Grey Polypropylene		Nylon Grigio Grey Nylon	
Temperature di Utilizzo Raccomandate Recommended working temperatures	Max= +70°C Min= -30°C	+70°C -30°C	+40°C -5°C	+40°C -5°C
Catteristiche del Mozzo Hub characteristics	Cuscinetto a Sfera 6021RS Ball Bearing 6021RS Parafilo Poliammide Grigio Grey Polyamide Threadguard		Cuscinetti a Sfera 6021RS Nucleo Centrale Polipropilene iniettato sull'Assale in Acciaio Ball Bearings 6021RS Polypropylene Central Core injected on Steel Axle Parafili Poliammide Grigio Grey Polyamide Threadguards	

Portata Dinamica conforme UNI EN 12527 Dynamic load capacity conform UNI EN 12527	daN D	Resistenza al Rotolamento (FR) alla Portata Nominale daN FR Rolling resistance (FR) at rated capacity	Weight for a piece= gr
		Resistenza al Superamento Ostacolo (FO) alla Portata Nominale H ostacolo=1% ø della Ruota Min 0.5 mm daN FO Obstacle overcoming resistance (FO) at rated capacity obstacle H=1% of wheel, min. 0.5 mm	

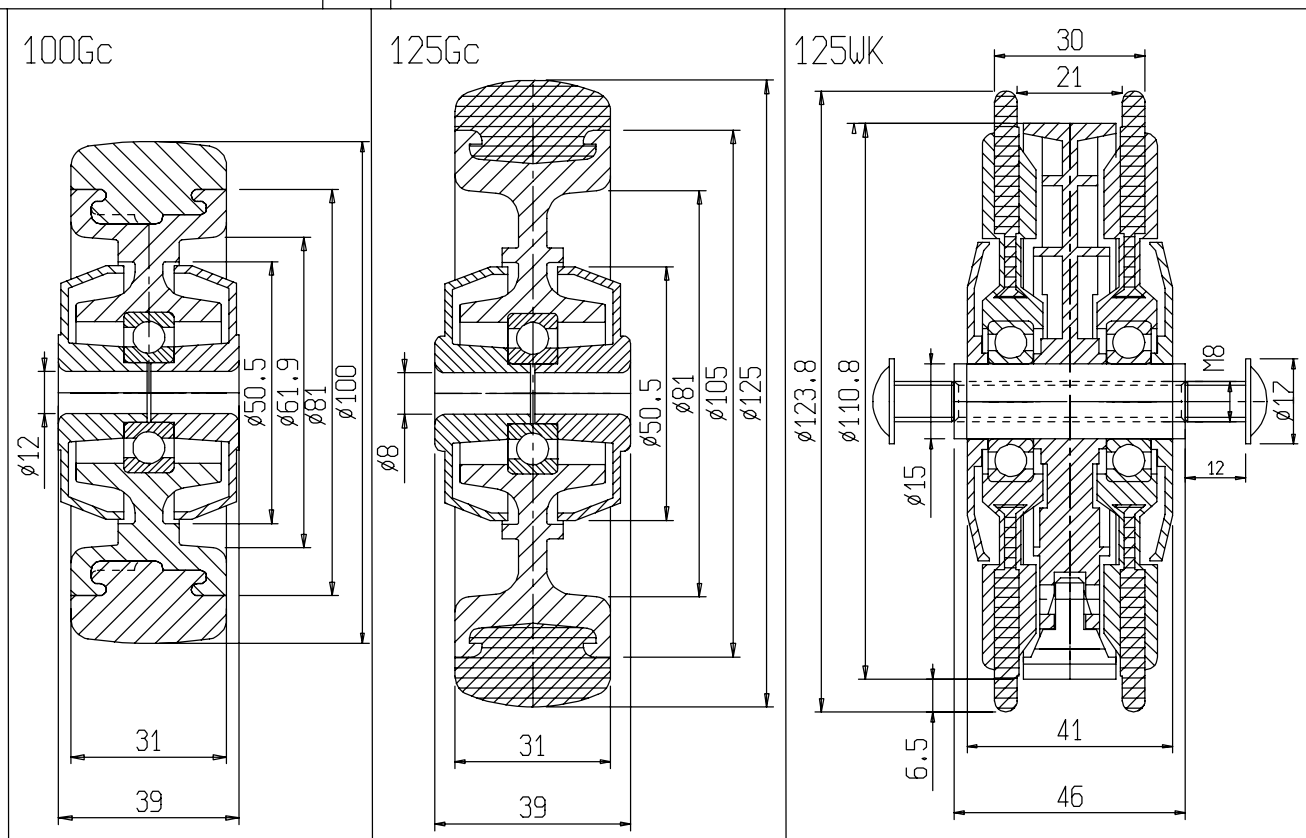

ITEM	100/Gcc	125/Gcc	125/WK
daN D	100	100	65
daN S	150	150	97.5
daN FR	-	-	-
daN FO	-	-	-
gr	280	390	380

Gamma di Fissaggi Standard per Supporti Supermarket

Range of standard fixings for forks of the Supermarket series

A Foro Passante ø10.2
per Vite di Fissaggio Imbus M10x25
(*)

With bolt hole of ø 10.2 for
fixing screw IMBUS M10x25
(*)

A Foro Passante ø12.2
per Vite di Fissaggio Imbus M12x25
(*)

With bolt hole of ø 12.2 for
fixing screw IMBUS M12x25
(*)

B10

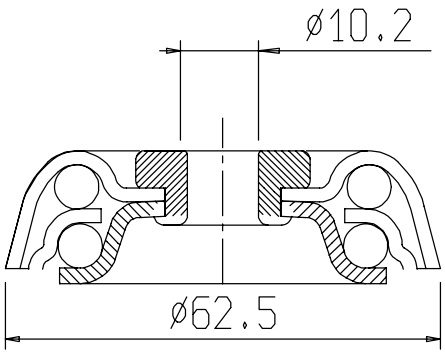

* Lunghezza della Vite Inseribile con Ruota Assemblata

* Length of screw that can be inserted with assembled wheel

B12

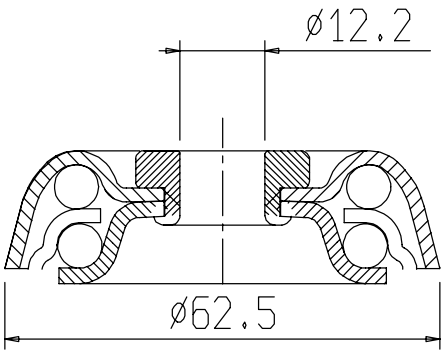

* Lunghezza della Vite Inseribile con Ruota Assemblata

* Length of screw that can be inserted with assembled wheel

A Vite M12x30+Boccola Quadra 12x12x5

Screw M12x30+Square Bushing 12x12x5

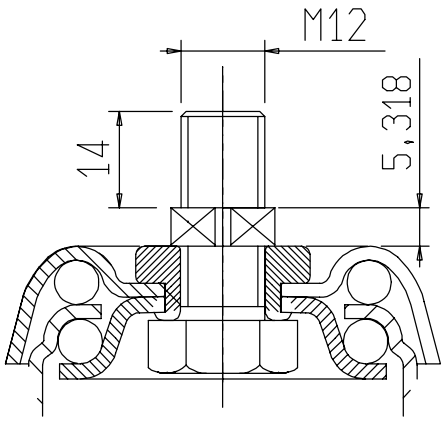

A Codulo Rettangolare Avvitato

screwed Rectangular Stem

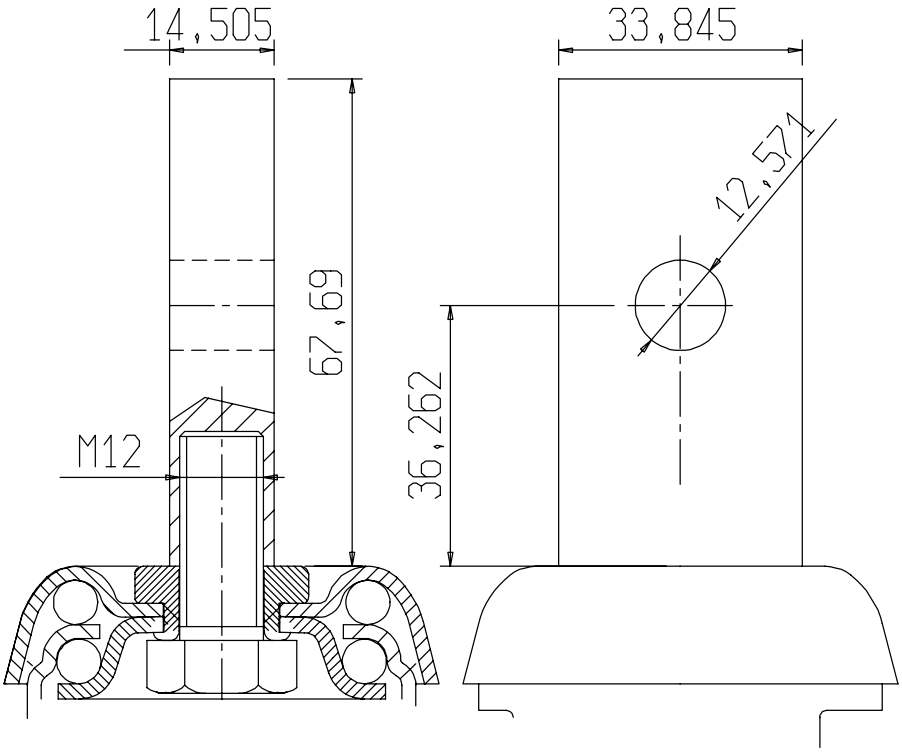

Supporti girevoli Serie Supermarket nella Gamma di: Altezze, Larghezza Mozzo, Fissaggi
Swivel forks of the Supermarket series : height, hub length and fixings range

Materiale: Lamiera ferro secondo standard EN 10130
Trattamanto superficiale: Zincatura passivata UNI ISO 2081
Corona sfere superiore: n. 20 sfere 1/4" ingrassate
Corona sfere inferiore: n. 20 sfere 1/4" ingrassate
Material: Iron sheet subject to EN 10130
Surface treatment: passivated galvanisation subject to UNI ISO 2081
Upper ball crown N. 20 greased balls 1/4
Lower ball crown N. 20 greased balls 1/4

daN D Portata Dinamica conforme UNI EN 12527 *

daN D Dynamic load capacity conform UNI EN 12527 *

100

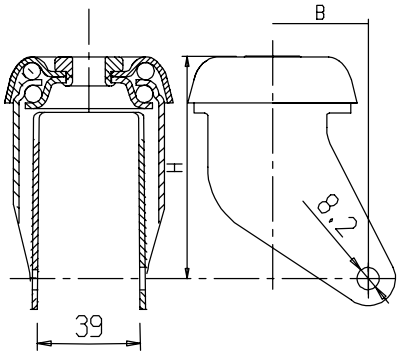

gr = Peso per 1 pezzo

gr = Weight for a piece

	B10	B12	A Vite M12x30+ Boccola Quadra 12x12 Screw M12x30 + Square Bushing 12x12	A Codulo Rettangolare Avvitato screwed Rectangular Stem
	ø10.2, ø62.5 — M10x25 Vite Inseribile con Ruota Assemblata / M10x25 screw that can be inserted with assembled wheel	ø12.2, ø62.5 — M12x25 Vite Inseribile con Ruota Assemblata / M12x25 screw that can be inserted with assembled wheel	M12, 14, 5	15, 35, 70, 37.5, M12, ø13
ITEM	100/S39/B10	100/S39/B12	100/S39/F 12x30	100/S39/C 35x15
H	75	75	75	75
B	27	27	27	27
daN D	100	100	100	100
gr	-	-	-	-

* La portata Dinamica indicata per i soli supporti verificata secondo UNI 12527 con Ruota nostro Codice 5679

* The Dynamic load capacity mentioned for the only Forks checked according to UNI 12527 assembled with our Wheel code 5679

125

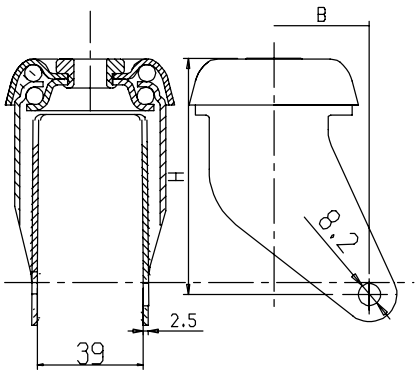

gr = Peso per 1 pezzo

gr = Weight for a piece

	B10	B12	A Vite M12x30+ Boccola Quadra 12x12 Screw M12x30 + Square Bushing 12x12	A Codulo Rettangolare Avvitato screwed Rectangular Stem
	ø10.2, ø62.5 — M10x25 Vite Inseribile con Ruota Assemblata / M10x25 screw that can be inserted with assembled wheel	ø12.2, ø62.5 — M12x25 Vite Inseribile con Ruota Assemblata / M12x25 screw that can be inserted with assembled wheel	M12, 14, 5	15, 35, 70, 37.5, M12, ø13
ITEM	125/S39/B10	125/S39/B12	125/S39/F 12x30	125/S39/C 35x15
H	87	87	87	87
B	35.3	35.3	35.3	35.3
daN D	100	100	100	100
gr	357	357	369	645

* La portata Dinamica indicata per i soli supporti verificata secondo UNI 12527 con Ruota nostro Codice 5680

* The Dynamic load capacity mentioned for the only Forks checked according to UNI 12527 assembled with our Wheel code 5680

125

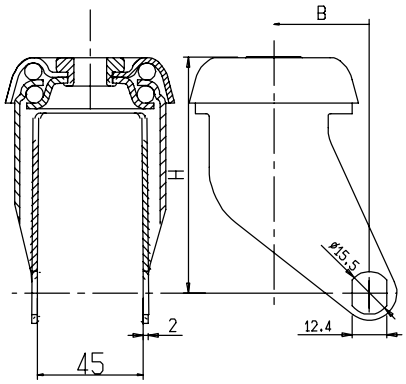

gr = Peso per 1 pezzo

gr = Weight for a piece

	B10	B12	A Vite M12x30+ Boccola Quadra 12x12 Screw M12x30 + Square Bushing 12x12	A Codulo Rettangolare Avvitato screwed Rectangular Stem
	ø10.2, ø62.5 — M10x25 Vite Inseribile con Ruota Assemblata / M10x25 screw that can be inserted with assembled wheel	ø12.2, ø62.5 — M12x25 Vite Inseribile con Ruota Assemblata / M12x25screw that can be inserted with assembled wheel	M12, 14, 5	15, 35, 70, 37.5, M12, ø13
ITEM	125/S45/B10	125/S45/B12	125/S45/F 12x30	125/S45/C 35x15
H	88.5	88.5	88.5	88.5
B	35.3	35.3	35.3	35.3
daN D	50	50	50	50
gr	380	380	392	668

* La portata Dinamica indicata per i soli supporti verificata secondo UNI 12527 con Ruota nostro Codice 5685

* The Dynamic load capacity mentioned for the only Forks checked according to UNI 12527 assembled with our Wheel code 5685

Complessivi girevoli Serie Supermarket nella Gamma di:FissaggieRuote,assemlati

Swivel castors of Supermarket series assembled with the fixings and wheels range

Requisiti dei Complessivi assemblati alle varie Ruote Requirements of the castors assembled with the different wheels		100Gc
Portata Dinamica conforme UNI EN 12527 Dynamic load capacity conform UNI EN 12527	D	100

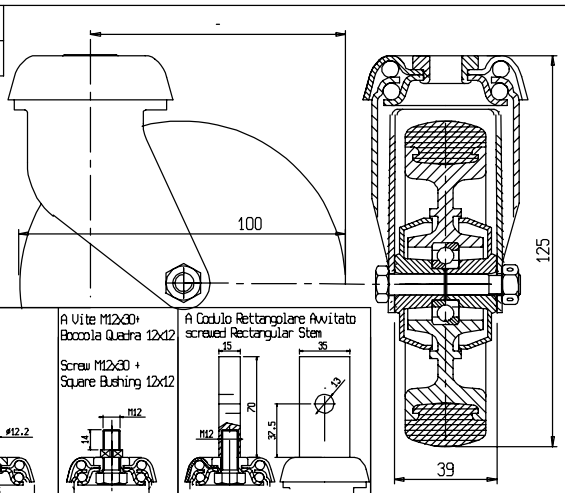

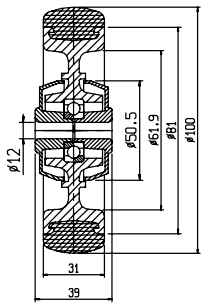

	B10	B12	A Vite M12x30+ Boccola Quadra 12x12 Screw M12x30 + Square Bushing 12x12	A Codulo Rettangolare Avvitato screwed Rectangular Stem
	ø10.2, ø62.5 M10x30 Vite Inseribile con Ruota Assemblata M10x30 screw that can be inserted with assembled wheel	ø12.2, ø62.5 M12x30 Vite Inseribile con Ruota Assemblata M12x30 screw that can be inserted with assembled wheel	M12, 14	15, 35, 70, 37.5, M12, 13
ITEM	100/S/GcB10	100/S/GcB12	100/S/GcF 12x30	100/S/GcC 35x15
gr	-	-	-	-

gr = Peso per 1 pezzo

gr =Weight for a piece

Requisiti dei Complessivi assemblati alle varie Ruote Requirements of the castors assembled with the different wheels		125Gc
Portata Dinamica conforme UNI EN 12527 Dynamic load capacity conform UNI EN 12527	D	100

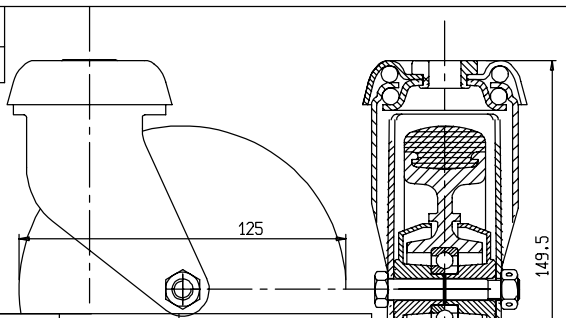

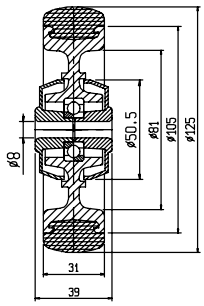

	B10	B12	A Vite M12x30+ Boccola Quadra 12x12 Screw M12x30 + Square Bushing 12x12	A Codulo Rettangolare Avvitato screwed Rectangular Stem
	ø10.2, ø62.5 M10x30 Vite Inseribile con Ruota Assemblata M10x30 screw that can be inserted with assembled wheel	ø12.2, ø62.5 M12x30 Vite Inseribile con Ruota Assemblata M12x30 screw that can be inserted with assembled wheel	M12, 14	15, 35, 70, 37.5, M12, 13
ITEM	125/S/GcB10	125/S/GcB12	125/S/GcF 12x30	125/S/GcC 35x15
gr	724	724	736	998

gr = Peso per 1 pezzo

gr =Weight for a piece

Requisiti dei Complessivi assemblati alle varie Ruote Requirements of the castors assembled with the different wheels		125wk
Portata Dinamica conforme UNI EN 12527 Dynamic load capacity conform UNI EN 12527	D	50

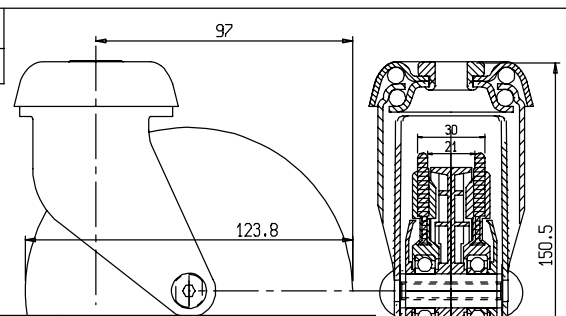

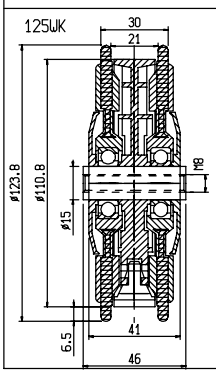

	B10	B12	A Vite M12x30+ Boccola Quadra 12x12 Screw M12x30 + Square Bushing 12x12	A Codulo Rettangolare Avvitato screwed Rectangular Stem
	ø10.2, ø62.5 M10x30 Vite Inseribile con Ruota Assemblata M10x30 screw that can be inserted with assembled wheel	ø12.2, ø62.5 M12x30 Vite Inseribile con Ruota Assemblata M12x30 screw that can be inserted with assembled wheel	M12, 14	15, 35, 70, 37.5, M12, 13
ITEM	125/S/WKB10	125/S/WKB12	125/S/WKF 12x30	125/S/WKC 35x15
gr	700	700	712	974

gr = Peso per 1 pezzo

gr =Weight for a piece

RUOTE SERIE Pd CON BATTISTRADA IN POLVERINO SINTERIZZATO
WHEELS SERIES Pd WITH SINTERED POWDER TREAD

SERIE SL

SERIE SM

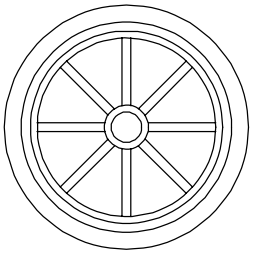

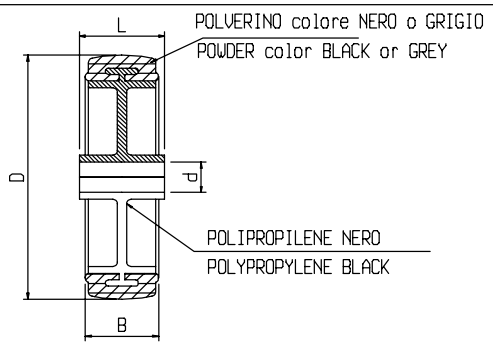

ITEM	D	d	L	B	PORTATA DINAMICA DYNAMIC LOAD CAPACITY	PORTATA STATICA STATIC LOAD CAPACITY	PESO gr. WEIGHT
Pd/SL/125	125	10	35	30	50	75	183
Pd/SL/150	150	12-13 15-16	40	30	60	90	240
Pd/SL/160	160	20	44	40	70	105	280
Pd/SL/175	175	15-16	45	40	80	120	498
SMX/175	175	15-16	53	45	80	135	530
SMX/200	200	15-16	53	45	80	135	665
Pd/SM/80	80	10	35	28	60	90	92
Pd/SM/90	90	10	35	28	60	90	127
Pd/SM/100	100	8-10	35	28	60	90	120
Pd/SM/125	125	12-15-16	40	35	70	105	218
Pd/SM/150	150	12-15	40	38	80	120	342
Pd/SM/175	175	14-20	57	45	90	135	530
Pd/SM/200	200	14-20	57	45	100	150	720
Pd/SM/230	230	14-20	57	45	120	180	880
Pd/SM/250	250	14-20	57	50	120	180	1220

RUOTE SERIE Pd CON BATTISTRADA IN POLVERINO SINTERIZZATO
WHEELS SERIES Pd WITH SINTERED POWDER TREAD

SERIE SR

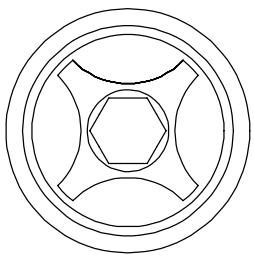

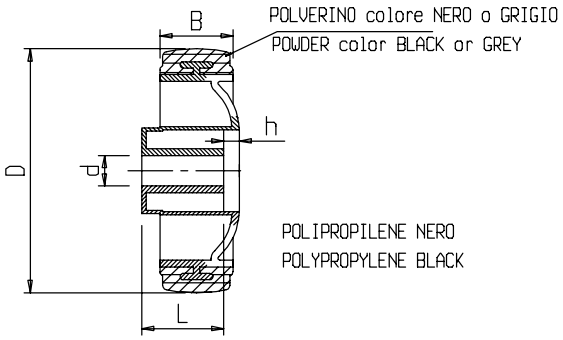

ITEM	D	d	L	B	h	PORTATA DINAMICA DYNAMIC LOAD CAPACITY	PORTATA STATICA STATIC LOAD CAPACITY	PESO gr. WEIGHT
Pd/SR/125	125	12-15-16	40	35	6	50	90	184
Pd/SR/150	150	10-12 15-16	40	40	6	70	105	300
Pd/SR/175	175	14-20	47	45	10	90	135	500
Pd/SR/200	200	14-15 16-20	47	50	10	100	150	640
Pd/SR/250	250	14-20-25	57	60	10	120	180	1265

AL.FER SRL

AL.FER & C. S.R.L.
Via Castagnini n.25
Tel.(0039)051 728569 - Fax (0039)051 728166
e-mail:info@alfer.it-http:/www.alfer.it